cingular WIRELESS

PUEBLO, COLORADO

DETAIL NUMBERING SYSTEM

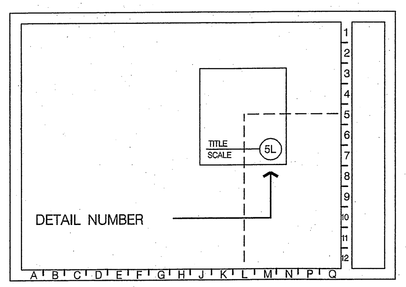

SYMBOLS LEGEND:

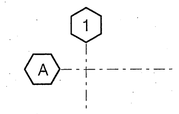

COLUMN LINES
ORIENT POINT OF HEXAGONS TO COLUMN LINES

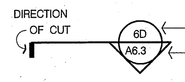

SECTION
SECTION IDENTIFICATION
SHEET NUMBER

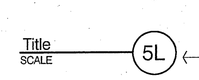

DETAIL IDENTIFICATION
REPRESENTS LOCATION BY GRID ON STANDARD SHEET

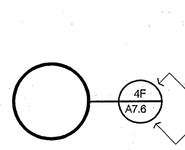

SMALL DETAIL BLOW–UP
DETAIL IDENTIFICATION
SHEET NUMBER

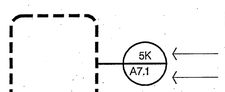

LARGE DETAIL BLOW–UP
DETAIL IDENTIFICATION
SHEET NUMBER

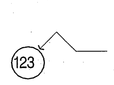

DOOR SYMBOL
DOOR NUMBER



ROOM DESIGNATION
SPACE NAME
SPACE NUMBER OR FINISH TYPE



MATCH LINE
SHADED PORTION IS SIDE CONSIDERED

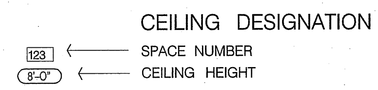

CEILING DESIGNATION
SPACE NUMBER
CEILING HEIGHT



WORK POINT, CONTROL POINT OR DATUM POINT



TOILET ROOM ACCESSORIES TYPE

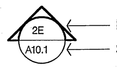

ELEVATIONS
ELEVATION IDENTIFICATION
SHEET NUMBER

MATERIALS LEGEND:

(SECTIONS & DETAILS)

- PLASTER OR GYP. BD.
- ACOUSTICAL TILE
- CONCRETE
- CONCRETE MASONRY UNIT
- CERAMIC OR QUARRY TILE
- STEEL (LARGE SCALE)
- BATT INSULATION
- RIGID INSULATION
- STONE FILL
- EARTH
- PLYWOOD
- ROUGH WOOD
- E.I.F.S.(EXTER. INSULATION AND FINISH SYSTEM
- STONE
- FINISHED WOOD

INDEX OF DRAWINGS

GENERAL

LAST REV	DWG #	TITLE
05-08-06	A0.0	COVER & INDEX

CIVIL

LAST REV	DWG #	TITLE
05-08-06	C2.0	SITE PLAN
05-08-06	C2.1	SITE PLAN

ARCHITECTURAL

LAST REV	DWG #	TITLE
05-08-06	A2.0	LIFE SAFETY PLAN, GENERAL NOTES
05-08-06	A2.1	FLOOR PLAN
05-08-06	A2.2	ENLARGED PLANS
05-08-06	A2.3	ENLARGED PLANS
05-08-06	A2.4	ENLARGED PLANS
05-08-06	A2.5	ENLARGED PLANS
05-08-06	A2.6	ENLARGED PLANS
05-08-06	A3.1	ROOF PLAN, ROOF DETAILS
05-08-06	A4.1	EXTERIOR ELEVATIONS
05-08-06	A6.1	SECTIONS
05-08-06	A6.2	SECTIONS
05-08-06	A6.3	SECTIONS
05-08-06	A6.4	SECTIONS
05-08-06	A8.1	DOOR SCHEDULE, ELEVATIONS AND DETAILS

STRUCTURAL

LAST REV	DWG #	TITLE
05-08-06	S1	STANDARD NOTES AND SECTIONS
05-08-06	S2	FOUNDATION PLAN & SCHEDULES
05-08-06	S3	FOUNDATION DETAILS
05-08-06	S4	LOW ROOF FRAMING PLAN
05-08-06	S5	MAIN ROOF FRAMING PLAN
05-08-06	S6	CLERESTORY FRAMING PLAN
05-08-06	S7	FRAMING DETAILS
05-08-06	S8	FRAMING DETAILS
05-08-06	S9	ENLARGED CANOPY FRAMING PLAN

INTERIORS

LAST REV	DWG #	TITLE

DRAWINGS TO BE ISSUED AT A FUTURE DATE

PLUMBING

LAST REV	DWG #	TITLE
05-08-06	P2.1	PLUMBING FLOOR PLAN – UNDERGROUND PIPING
05-08-06	P2.2	PLUMBING FLOOR PLAN – PART A
05-08-06	P2.3	PLUMBING FLOOR PLAN – PART B
05-08-06	P3.1	PLUMBING ROOF PLAN
05-08-06	P3.2	PLUMBING PART PLANS
05-08-06	P4.1	PLUMBING DETAILS
05-08-06	P5.1	PLUMBING RISER DIAGRAMS

MECHANICAL

LAST REV	DWG #	TITLE
05-08-06	M0.1	HVAC NOTES AND LEGEND
05-08-06	M2.1	OVERALL HVAC FLOOR PLAN
05-08-06	M2.2	HVAC FLOOR PLAN – PART A
05-08-06	M2.3	HVAC FLOOR PLAN – PART B
05-08-06	M3.1	HVAC ROOF PLAN
05-08-06	M6.1	HVAC SECTIONS
05-08-06	M7.1	HVAC DETAILS
05-08-06	M7.2	HVAC DETAILS
05-08-06	M8.1	HVAC SCHEDULES
05-08-06	M8.2	HVAC SCHEDULES

ELECTRICAL

LAST REV	DWG #	TITLE
05-08-06	E0.1	ELECTRICAL LEGEND AND NOTES
05-08-06	E1.1	ELECTRICAL UNDERGROUND SITE PLAN
05-08-06	E1.2	ELECTRICAL GROUNDING PLAN
05-08-06	E1.3	ELECTRICAL SITE LIGHTING PLAN
05-08-06	E1.3A	ELECTRICAL SITE LIGHTING PHOTOMETRICS
05-08-06	EP3.1	ELECTRICAL ONE LINE DIAGRAM
05-08-06	EP3.2	ELECTRICAL PART PLANS
05-08-06	EP3.3	ELECTRICAL PART PLANS

DEVELOPER:

ADVECO CORPORATION
3867 HOLCOMB BRIDGE ROAD
NORCROSS, GA 30092
CONTACT: GAY TUCKER
770–441–7600

CIVIL ENGINEER:

ABEL ENGINEERING PROFESSIONALS, INC.
102 SOUTH ONEIDA STREET
PUEBLO, COLORADO 81003
CONTACT: KATHY COX
719–546–2235

ARCHITECTS:

STEVENS & WILKINSON STANG & NEWDOW
100 PEACHTREE ST
ATLANTA, GA 30303–6801
CONTACT: PERRY DAVIDSON
404–522–8888

INTERIOR DESIGNERS:

IDEASPAN
100 PEACHTREE ST
ATLANTA, GA 30303–6801
CONTACT: RICHARD MERLINI
404–522–8888

STRUCTURAL ENGINEERS:

NEEDHAM & ASSOCIATES
8417 SANTA FE DR, SUITE, SUITE 200
OVERLAND PARK, KS 66212
CONTACT: JEFF NEEDHAM or KAREN HAND
913–385–5300

MECHANICAL, ELECTRICAL, AND PLUMBING ENGINEERS:

STEVENS & WILKINSON STANG & NEWDOW
100 PEACHTREE ST
ATLANTA, GA 30303–6801
CONTACT: DALE BROWN
404–522–8888

RECEIVED
MAY 08 2006
INTEGRA CONSTRUCTION, INC.

S&W
Stevens&Wilkinson
STEVENS & WILKINSON STANG & NEWDOW, INC.
ARCHITECTURE ENGINEERING INTERIORS
100 PEACHTREE STREET NW, SUITE 2500
ATLANTA, GA 30303
P 404.522.8888
F 404.521.6204
WWW.SW-SN.COM

idea|span
linking knowledge and design
A STEVENS & WILKINSON COMPANY
100 PEACHTREE STREET NW, SUITE 2400
ATLANTA, GA 30303
P 404.522.8899
F 404.521.6343
www.idea-span.com

■ SUBMITTALS

DATE	DESCRIPTION
04.24.06	INFORMAL RELEASE ON PRECAST
04.26.06	RELEASE ON PRECAST
05.08.06	PRICING / PERMIT SET

■ REVISIONS

DATE	DESCRIPTION

□ APPROVED FOR CONSTRUCTION
□ NOT APPROVED FOR CONSTRUCTION

THIS DRAWING IS THE PROPERTY OF STEVENS & WILKINSON STANG & NEWDOW, INC. UNAUTHORIZED USE OF ANY KIND, INCLUDING USE ON OTHER PROJECT IS PROHIBITED.

© STEVENS & WILKINSON STANG & NEWDOW, INC.

■ PROJECT NUMBER: 06041.00
■ DATE: 05.08.06
■ FILE: F:/PROJECTS/06041.00/DESIGN

cingular WIRELESS
PUEBLO, COLORADO

COVER & INDEX

A0.0

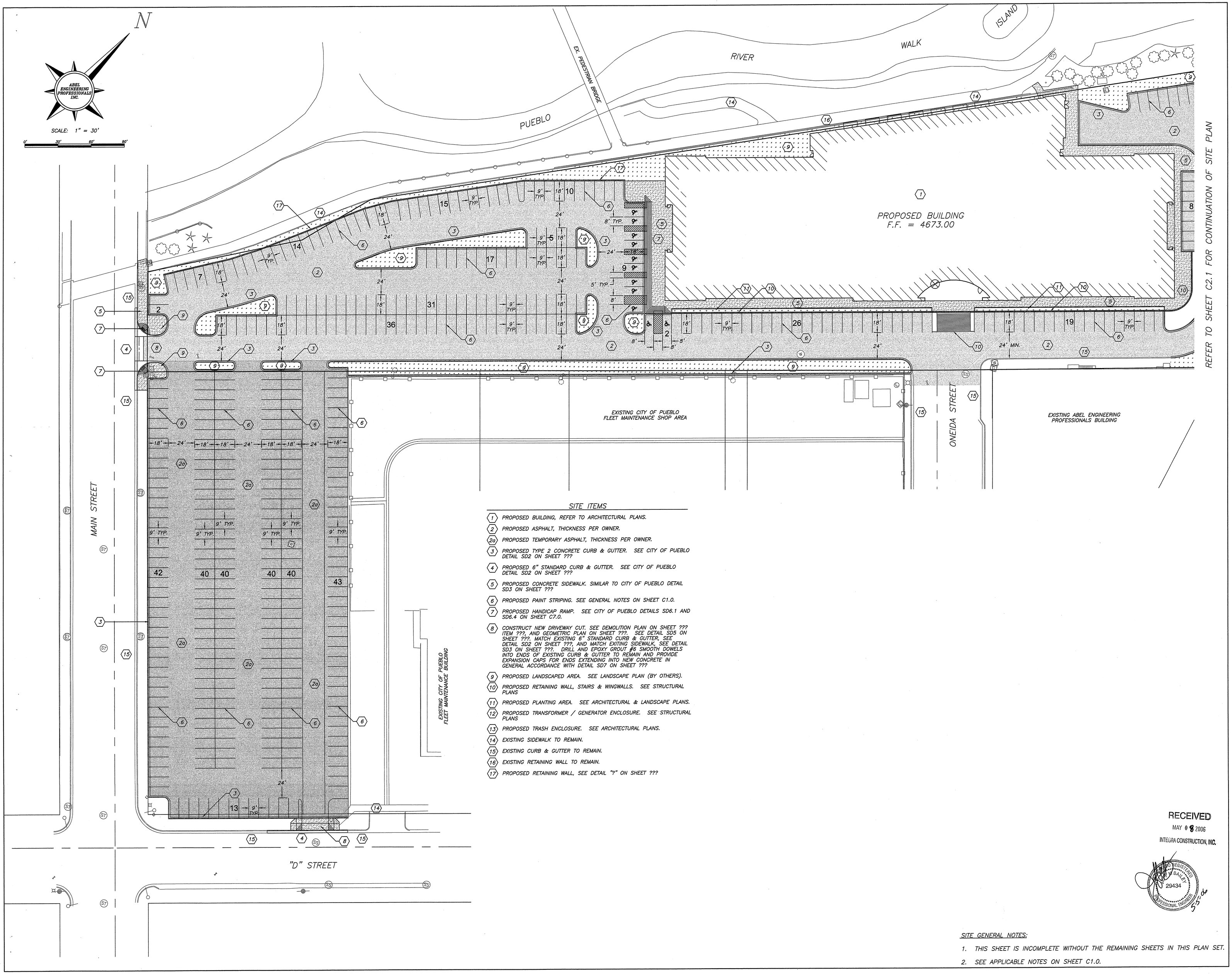

SITE ITEMS

1. PROPOSED BUILDING, REFER TO ARCHITECTURAL PLANS.
2. PROPOSED ASPHALT, THICKNESS PER OWNER.
2a. PROPOSED TEMPORARY ASPHALT, THICKNESS PER OWNER.
3. PROPOSED TYPE 2 CONCRETE CURB & GUTTER. SEE CITY OF PUEBLO DETAIL SD2 ON SHEET ???
4. PROPOSED 6" STANDARD CURB & GUTTER. SEE CITY OF PUEBLO DETAIL SD2 ON SHEET ???
5. PROPOSED CONCRETE SIDEWALK. SIMILAR TO CITY OF PUEBLO DETAIL SD3 ON SHEET ???
6. PROPOSED PAINT STRIPING. SEE GENERAL NOTES ON SHEET C1.0.
7. PROPOSED HANDICAP RAMP. SEE CITY OF PUEBLO DETAILS SD6.1 AND SD6.4 ON SHEET C7.0.
8. CONSTRUCT NEW DRIVEWAY CUT. SEE DEMOLITION PLAN ON SHEET ??? ITEM ???, AND GEOMETRIC PLAN ON SHEET ???. SEE DETAIL SD5 ON SHEET ???. MATCH EXISTING 6" STANDARD CURB & GUTTER, SEE DETAIL SD2 ON SHEET ???, AND MATCH EXITING SIDEWALK, SEE DETAIL SD3 ON SHEET ???. DRILL AND EPOXY GROUT #6 SMOOTH DOWELS INTO ENDS OF EXISTING CURB & GUTTER TO REMAIN AND PROVIDE EXPANSION CAPS FOR ENDS EXTENDING INTO NEW CONCRETE IN GENERAL ACCORDANCE WITH DETAIL SD7 ON SHEET ???
9. PROPOSED LANDSCAPED AREA. SEE LANDSCAPE PLAN (BY OTHERS).
10. PROPOSED RETAINING WALL, STAIRS & WINGWALLS. SEE STRUCTURAL PLANS
11. PROPOSED PLANTING AREA. SEE ARCHITECTURAL & LANDSCAPE PLANS.
12. PROPOSED TRANSFORMER / GENERATOR ENCLOSURE. SEE STRUCTURAL PLANS
13. PROPOSED TRASH ENCLOSURE. SEE ARCHITECTURAL PLANS.
14. EXISTING SIDEWALK TO REMAIN.
15. EXISTING CURB & GUTTER TO REMAIN.
16. EXISTING RETAINING WALL TO REMAIN.
17. PROPOSED RETAINING WALL, SEE DETAIL "?" ON SHEET ???

RECEIVED
MAY 08 2006
INTEGRA CONSTRUCTION, INC.

REGISTERED BAILEY 29434 PROFESSIONAL ENGINEER

SITE GENERAL NOTES:

1. THIS SHEET IS INCOMPLETE WITHOUT THE REMAINING SHEETS IN THIS PLAN SET.
2. SEE APPLICABLE NOTES ON SHEET C1.0.

S&W

STEVENS & WILKINSON STANG & NEWDOW, INC.
ARCHITECTURE ENGINEERING INTERIORS
100 PEACHTREE STREET NW, SUITE 2500
ATLANTA, GA 30303
P 404.522.8888
F 404.521.6204
WWW.SW-SN.COM

idea|span
linking knowledge and design
A STEVENS & WILKINSON COMPANY

100 PEACHTREE STREET NW, SUITE 2400
ATLANTA, GA 30303
P 404.522.8899
F 404.521.6343
www.idea-span.com

AEP
Abel Engineering Professionals, Inc.

CIVIL ENGINEERING
SURVEY
ARCHITECTURE
P.O. BOX 1826 PUEBLO, CO. 81002
102 S. ONEIDA ST. PUEBLO CO. 81003
TEL 719.546.2235
FAX 719. 546.2166

■ SUBMITTALS

DATE	DESCRIPTION
05.08.06	PRICING / PERMIT SET

■ REVISIONS

DATE	DESCRIPTION

■ APPROVED FOR CONSTRUCTION
□ NOT APPROVED FOR CONSTRUCTION

THIS DRAWING IS THE PROPERTY OF STEVENS & WILKINSON STANG & NEWDOW, INC. UNAUTHORIZED USE OF ANY KIND, INCLUDING USE ON OTHER PROJECT IS PROHIBITED.
© STEVENS & WILKINSON STANG & NEWDOW, INC.

■ PROJECT NUMBER: 2006-121
■ DATE: 05.08.06
■ FILE: 2006 PROJECT: 2006-121 CINGULAR CIVIL DRAWINGS: SITE PLAN

cingular WIRELESS
PUEBLO, COLORADO

SITE PLAN

C2.0

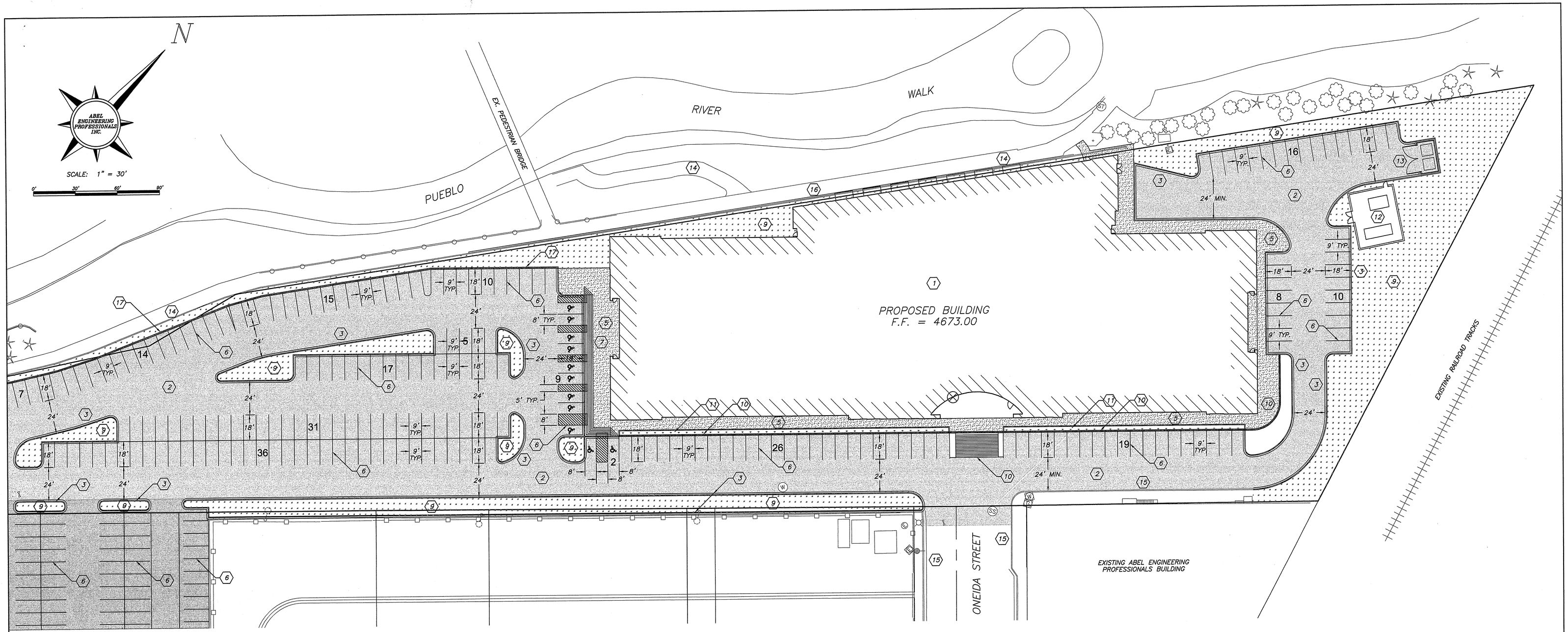

REFER TO SHEET C2.0 FOR CONTINUATION OF SITE PLAN

SITE ITEMS

1. PROPOSED BUILDING, REFER TO ARCHITECTURAL PLANS.
2. PROPOSED ASPHALT, THICKNESS PER OWNER.
2a. PROPOSED TEMPORARY ASPHALT, THICKNESS PER OWNER.
3. PROPOSED TYPE 2 CONCRETE CURB & GUTTER. SEE CITY OF PUEBLO DETAIL SD2 ON SHEET ???
4. PROPOSED 6" STANDARD CURB & GUTTER. SEE CITY OF PUEBLO DETAIL SD2 ON SHEET ???
5. PROPOSED CONCRETE SIDEWALK. SIMILAR TO CITY OF PUEBLO DETAIL SDI ON SHEET ???
6. PROPOSED PAINT STRIPING. SEE GENERAL NOTES ON SHEET C1.0.
7. PROPOSED HANDICAP RAMP. SEE CITY OF PUEBLO DETAILS SD6.1 AND SD6.4 ON SHEET C7.0.
8. CONSTRUCT NEW DRIVEWAY CUT. SEE DEMOLITION PLAN ON SHEET ??? ITEM ???, AND GEOMETRIC PLAN ON SHEET ???. SEE DETAIL SD5 ON SHEET ???. MATCH EXISTING 6" STANDARD CURB & GUTTER, SEE DETAIL SD2 ON SHEET ???, AND MATCH EXITING SIDEWALK, SEE DETAIL SDI ON SHEET ???. DRILL AND EPOXY GROUT #6 SMOOTH DOWELS INTO ENDS OF EXISTING CURB & GUTTER TO REMAIN AND PROVIDE EXPANSION CAPS FOR ENDS EXTENDING INTO NEW CONCRETE IN GENERAL ACCORDANCE WITH DETAIL SDI ON SHEET ???
9. PROPOSED LANDSCAPED AREA. SEE LANDSCAPE PLAN (BY OTHERS).
10. PROPOSED RETAINING WALL, STAIRS & WINGWALLS. SEE STRUCTURAL PLANS
11. PROPOSED PLANTING AREA. SEE ARCHITECTURAL & LANDSCAPE PLANS.
12. PROPOSED TRANSFORMER / GENERATOR ENCLOSURE. SEE STRUCTURAL PLANS
13. PROPOSED TRASH ENCLOSURE. SEE ARCHITECTURAL PLANS.
14. EXISTING SIDEWALK TO REMAIN.
15. EXISTING CURB & GUTTER TO REMAIN.
16. EXISTING RETAINING WALL TO REMAIN.
17. PROPOSED RETAINING WALL, SEE DETAIL "?" ON SHEET ???

RECEIVED
MAY 08 2006
INTEGRA CONSTRUCTION, INC.

REGISTERED PROFESSIONAL ENGINEER 29434 STATE OF COLORADO

SITE GENERAL NOTES:

1. THIS SHEET IS INCOMPLETE WITHOUT THE REMAINING SHEETS IN THIS PLAN SET.
2. SEE APPLICABLE NOTES ON SHEET C1.0.

S&W
STEVENS & WILKINSON STANG & NEWDOW, INC.
ARCHITECTURE ENGINEERING INTERIORS
100 PEACHTREE STREET NW, SUITE 2500
ATLANTA, GA 30303
P 404.522.8888
F 404.521.6204
WWW.SW-SN.COM

idea|span
linking knowledge and design
A STEVENS & WILKINSON COMPANY
100 PEACHTREE STREET NW, SUITE 2400
ATLANTA, GA 30303
P 404.522.8899
F 404.521.6343
www.idea-span.com

AEP
Abel Engineering Professionals, Inc.
CIVIL ENGINEERING
SURVEY
ARCHITECTURE
P.O. BOX 1826 PUEBLO, CO. 81002
102 S. ONEIDA ST. PUEBLO CO. 81003
TEL 719.546.2235
FAX 719. 546.2166

■ SUBMITTALS

DATE	DESCRIPTION
05.08.06	PRICING / PERMIT SET

■ REVISIONS

DATE	DESCRIPTION

■ APPROVED FOR CONSTRUCTION
□ NOT APPROVED FOR CONSTRUCTION

THIS DRAWING IS THE PROPERTY OF STEVENS & WILKINSON STANG & NEWDOW, INC. UNAUTHORIZED USE OF ANY KIND, INCLUDING USE ON OTHER PROJECT IS PROHIBITED.
© STEVENS & WILKINSON STANG & NEWDOW, INC.

■ PROJECT NUMBER: 2006-121
■ DATE: 05.08.06
■ FILE: 2006 PROJECT: 2006-121 CINGULAR CIVIL DRAWINGS: SITE PLAN

cingular WIRELESS
PUEBLO, COLORADO

SITE PLAN

C2.1

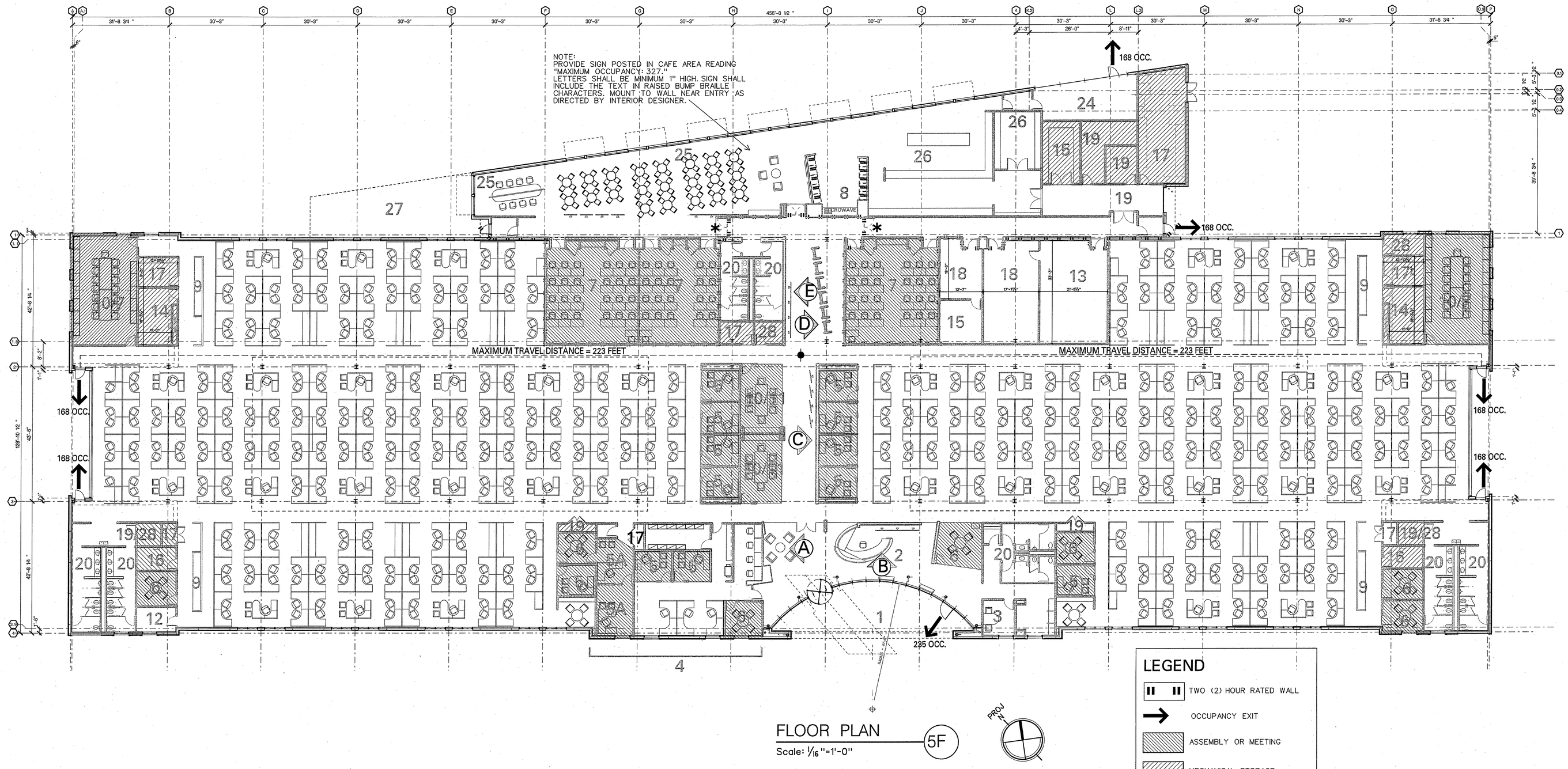

FLOOR PLAN

Scale: 1/16"=1'-0" — 5F

NOTE:
INTERIOR PARTITIONS AND FURNITURE SYSTEMS ARE SHOWN FOR INFORMATION ONLY AND ARE NOT INCLUDED IN THE BUILDING SHELL PERMIT

LEGEND

- TWO (2) HOUR RATED WALL
- OCCUPANCY EXIT
- ASSEMBLY OR MEETING
- MECHANICAL, STORAGE

1	ENTRANCE	5	OFFICE / 5A DIRECTOR	9	PANTRY/COPY/FAX	13	COMPUTER
2	RECEPTION	6	PRIVACY ROOMS	10	CONFERENCE	14	WIRING / DATA
3	INTERVIEW	7	TRAINING	11	TEAM MEETING ROOM	15	STORAGE/MAIL
4	HUMAN RESOURCES	8	BREAK/VENDING	12	MOTHER'S ROOM	16	MECHANICAL

17	ELECTRICAL	21	TRASH	25	INTERNET CAFE		
18	TECH SUPPORT	22	GENERATOR	26	PREP KITCHEN		
19	FACILITIES	23	TRANSFORMER	27	OUTDOOR DINING		
20	RESTROOMS	24	SMOKING CANOPY	28	PLUMBING		

GENERAL NOTES:

1. ALL INTERIOR WOOD BLOCKING SHALL BE FIRE RETARDANT TREATED.
2. ALL CEILING CAVITIES SHALL BE CONSTRUCTED WITH FIRE RESISTANT MATERIALS AND SHALL ONLY CONTAIN MATERIALS WHICH HAVE SMOKE DEVELOPED RATINGS NOT GREATER THAN 50 AND FLAME SPREAD RATINGS NOT GREATER THAN 25. DO NOT USE PVC PIPE IN R/A PLENUMS.
3. PAINT ALL FERROUS METAL EXPOSED TO WEATHER, EXCEPT PREFINISHED METAL
4. IT IS THE INTENT OF THESE DOCUMENTS THAT ALL ITEMS, EQUIPMENT, HARDWARE CLEARANCES, MOUNTING HEIGHTS, SIGNAGE, SYSTEMS, ETC BE IN COMPLIANCE WITH THE AMERICANS WITH DIABILITY ACT. THE GENERAL CONTRACTOR AND SUBCONTRACTORS SHALL REPORT TO THE ARCHITECT ANY DISCREPANCIES NOTED BETWEEN THE REQUIREMENTS OF THE ACT AND THE DOCUMENTS, AND WAIT FOR DIRECTIONS ON RESOLUTION OF THE DISCREPANCIES.
5. ALL EXTERIOR WALL METAL WALL FRAMING SHALL BE COLD FORMED METAL FRAMING AS SPECIFIED IN SECTION 05400. COLD FORMED METAL FRAMING STUDS SHALL BE DEPTH INDICATED ON SECTIONS WITH GAUGE AND SPACING AS REQUIRED BY LOADING.
6. ALL CEILING SPACES ARE RETURN AIR PLENUMS - NO COMBUSTIBLE MATERIAL OF ANY SORT SHALL BE INSTALLED IN CEILING SPACES.
7. RIGID INSULATION EXPOSED IN CEILING CAVITIES OR OTHER LOCATIONS SHALL BE FOIL-FACED, RIGID GLASS-FIBER BOARD INSULATION.
8. PROVIDE PRESSURE TREATED WOOD NAILERS AT THE PERIMETER OF ALL ROOF AREAS AND AT THE PERIMETER OF ROOF CURBS AND OTHER ROOF PENETRATIONS. NAILERS SHALL BE A MINIMUM OF 1½" WIDER THAN THE ELEMENT ON TOP OF IT, LEAVING 1½" EXPOSED FOR ROOFING ATTACHMENT
9. ALL EXTERIOR GYPSUM SHEATHING SHALL BE MOISTURE RESISTANT ½" THICK DENS-GLAS GOLD BY GEORGIA-PACIFIC
10. ALL PERIMETER INSULATION SHALL BE MIN. R-7.5, AND SHALL EXTEND A MINIMUM 3'-0" BELOW BOTTOM OF SLAB OR TO TOP OF FOOTING. IF TOP OF FOOTING IS LESS THAN 3'-0" BELOW BOTTOM OF SLAB, EXTEND INSULATION HORIZONTALLY TO ACHIEVE A MINIMUM LENGHT OF 3'-0".
11. PAINT ALL EXPOSED PIPING, SERVICE LINES, METERS, WALL MOUNTED EQUIPMENT, ETC VISIBLE FROM THE GROUND TO MATCH THE ADJACENT WALL SURFACE, OR, IF ON THE ROOF, COLOR 2. SEAL ALL JOINTS BETWEEN PIPES PENETRATING WALLS AND THE OPENING IN THE CONCRETE PANEL WITH SEALANT.
12. PENETRATIONS OR THROUGH OPENINGS IN THE BUILDING ENVELOPE SHALL BE SEALED, GASKETED, WEATHERSTRIPPED, OR OTHERWISE SEALED TO PREVENT AIR INFILTRATION AND EXFILTRATION.
13. INSTALL BATT INSULATION WITH THE VAPOR BARRIER FLUSH WITH THE CONDITIONED SIDE OF THE WALL.
14. ALL BUILDING INSULATION SHALL HAVE A 1 PERM OR BETTER INTEGRAL VAPOR BARRIER AND BE INSTALLED WITH THE VAPOR BARRIER TOWARDS THE CONDITIONED SIDE OF THE WALL AND SHALL HAVE JOINTS TAPED TO MAINTAIN A CONTINUOUS VAPOR BARRIER.
15. VAPOR BARRIER AT FLOOR SLAB SHALL CONSIST OF ASTM E 1745, CLASS B, FIVE PLY, NYLON OR POLYESTER CORD REINFORCED, LAMINATED, HIGH DENSITY POLYETHYLENE SHEET, MIN 10 MILS THICK. TAPE ALL JOINTS WITH A MANUFACTURER RECOMMENDED TAPE. PROTECT VAPOR BARRIER FROM DAMAGE, AND REPAIR ALL PUNCTURES PRIOR TO CONCRETE PLACEMENT.
16. METAL TRIM, COPINGS, AND FASCIAS INDICATED ON THESE DOCUMENTS TO BE CONSTRUCTED OF GALVANIZED METAL MAY BE CONSTRUCTED FROM KYNAR FINISHED ALUMINUM IN THE SPECIFIED COLORS.
17. ALL ROOF INSULATION SHALL MEET THE REQUIREMENTS OF UL 1256.
18. SEE STRUCTURAL DRAWING FOR FOUNDATIONS- FOUNDATIONS SHOWN ON ARCHITECTURAL DRAWINGS ARE TYP ONLY.

APPLICABLE CODES:

2003 INTERNATIONAL BUILDING CODE
2003 INTERNATIONAL FIRE CODE
2003 UNIFORM PLUMBING CODE
2003 UNIFORM MECHANICALCOD
2002 NATIONAL ELECTRICAL CODE

INSULATION SCHEDULE:

LOCATION	TYPE	R VALUE	MIN REQ'D R VALUE*
SLAB PERIMETER	1 1/2 " EXTRUDED POLYSTYRENE	7.5	7.5
WALL, CONC. PANEL	INSULATED	7.0	5.7
WALL, CONC	MINERAL FIBER BLANKET	13.0	5.7
WALL, CONC	1 1/2 " GLASS FIBER BOARD	6.5	5.7
WALL, FRAMED.	MINERAL FIBER BLANKET	19.0.	13.0
ROOF	3" POLYISO-CYANURATE BOARD	18.5	15.0

* MIN REQUIRED VALUE BASED ON ASHRAE 90.1-2001 PRESCRIPTIVE VALUES

GLAZING CHARACTERISTICS:

CHARACTERISTIC:	PROVIDED:	MAX. ALLOWED:
WINTER U VALUE FIXED	0.30	0.46
SHGC ALL ORIENTATIONS	0.34	0.39
SHGC NORTH	0.34	0.49

* MAX ALLOWED VALUE BASED ON ASHRAE 90.1-2001 PRESCRIPTIVE VALUES

OCCUPANT LOAD CALCULATIONS:

NOTE: THIS BUILDING IS A SECURE FACILITY NOT OPEN TO THE PUBLIC. ASSEMBLY, MEETING, AND OTHER SPACES ARE ACCESSORY TO THE OFFICE AREAS (I.E., BOTH SPACES WILL NOT BE OCCUPIED SIMULTANEOUSLY).

OCCUPANT LOAD FOR EGRESS:

AREA:	SF:	SF/OCC:	NUMBER OCCUPANTS:
OFF ACCESSORY ASSEMBLY	4,491	15	299
OFF ACCESSORY MEETING	3,651	15	243
SUPPORT (STORAGE, MECH, ELEC, JAN)	2,875	300	10
OFFICE, OFFICE ACCESSORY	54,752	100	548
TOTAL FOR OCCUPANT LOAD	65,769		1,100
RECEIVING	374		
TOTAL FOR BUILDING AREA	66,143		

OCCUPANT LOAD FOR PLUMBING FIXTURES:

NUMBER OF OCCUPANTS= 548 * 10 = 558 OCCUPANTS. ASSEMBLY AND MEETING SPACES ARE NOT OCCUPPIED AT THE SAME TIME AS OFFICE AND SUPPORT SPACES

ACTUAL NUMBER OF OCCUPANTS PER PROGRAM = 550 OCCUPANTS

USE 550 OCCUPANTS FOR PLUMBING FIXTURE REQUIREMENT

CODE INFORMATION:

OCCUPANCY: SBC BUSINESS GROUP B / NFPA 101 BUSINESS

TYPE OF CONSTRUCTION: SBC TYPE IV UNPROTECTED / NFPA 220 TYPE 11-000

SPRINKLERS: FULLY SPRINKLERED

ALLOWABLE AREA: UNLIMITED

ACTUAL TOTAL AREA: 66,143 S.F.

ALLOWABLE HEIGHT: 55 FEET ; ACTUAL HEIGHT: 33'-6"

FIRE RESISTANCE RATING OF STRUCTURAL ELEMENTS: 0 HR

FIRE RESISTANCE RATING OF EXTERIOR WALL OPENINGS: NC/NL , BASED ON 30 FEET OR MORE SEPARATION

FIRE RESISTANCE RATING OF EXTERIOR WALLS: NC

OCCUPANT LOAD: 1,100 OCCUPANTS- SEE CALCULATION THIS DRAWING

EGRESS WIDTH: .2" PER OCCUPANT = 220" REQUIRED WIDTH

EGRESS WIDTH PROVIDED: 2,639 OCCUPANTS, OR 528"

SHAFTS: NO SHAFTS ARE REQUIRED OR INCLUDED IN THIS PROJECT

NO GUARDRAILS OR STAIRS ARE REQUIRED OR INCLUDED IN THIS PROJECT

MAXIMUM TRAVEL DISTANCE ALLOWED: 300'

ACTUAL MAXIMUM TRAVEL DISTANCE: APPROXIMATELY 237'

PLUMBING FIXTURES	REQUIRED:	PROVIDED
MALE W.C / UR.	3	14
FEMALE W.C.	11	14
MALE LAVATORY	2	8
FEMALE LAVATORY	2	8
DRINKING FOUNTAIN	4	8
JANITOR SINK	1	2

SMOKE & HEAT VENTS - NOT REQUIRED

* INDICATES A DOOR HELD OPEN WITH MAGNETIC HOLD OPEN DEVICE CONNECTED TO THE BUILDING EMERGENCY ALARM SYSTEM- DOOR WILL AUTOMATICALLY CLOSE WHEN ALARM IS ACTIVATED.

RECEIVED
MAY 08 2006
INTEGRA CONSTRUCTION, INC.

S&W
Stevens&Wilkinson
STEVENS & WILKINSON STANG & NEWDOW, INC.
ARCHITECTURE ENGINEERING INTERIORS
100 PEACHTREE STREET NW, SUITE 2500
ATLANTA, GA 30303
P 404.522.8888
F 404.521.6204
WWW.SW-SN.COM

idea|span
linking knowledge and design
A STEVENS & WILKINSON COMPANY
100 PEACHTREE STREET NW, SUITE 2400
ATLANTA, GA 30303
P 404.522.8899
F 404.521.6343
www.idea-span.com

■ SUBMITTALS

DATE	DESCRIPTION
04.24.06	INFORMAL RELEASE ON PRECAST
04.26.06	RELEASE ON PRECAST
05.08.06	PRICING / PERMIT SET

■ REVISIONS

DATE	DESCRIPTION

□ APPROVED FOR CONSTRUCTION
□ NOT APPROVED FOR CONSTRUCTION

THIS DRAWING IS THE PROPERTY OF STEVENS & WILKINSON STANG & NEWDOW, INC. UNAUTHORIZED USE OF ANY KIND, INCLUDING USE ON OTHER PROJECT IS PROHIBITED.
© STEVENS & WILKINSON STANG & NEWDOW, INC.

■ PROJECT NUMBER: 06041.00
■ DATE: 05.08.06
■ FILE: F:/PROJECTS/06041.00/DESIGN

cingular WIRELESS
PUEBLO, COLORADO

LIFE SAFETY PLAN & GENERAL NOTES

A2.0

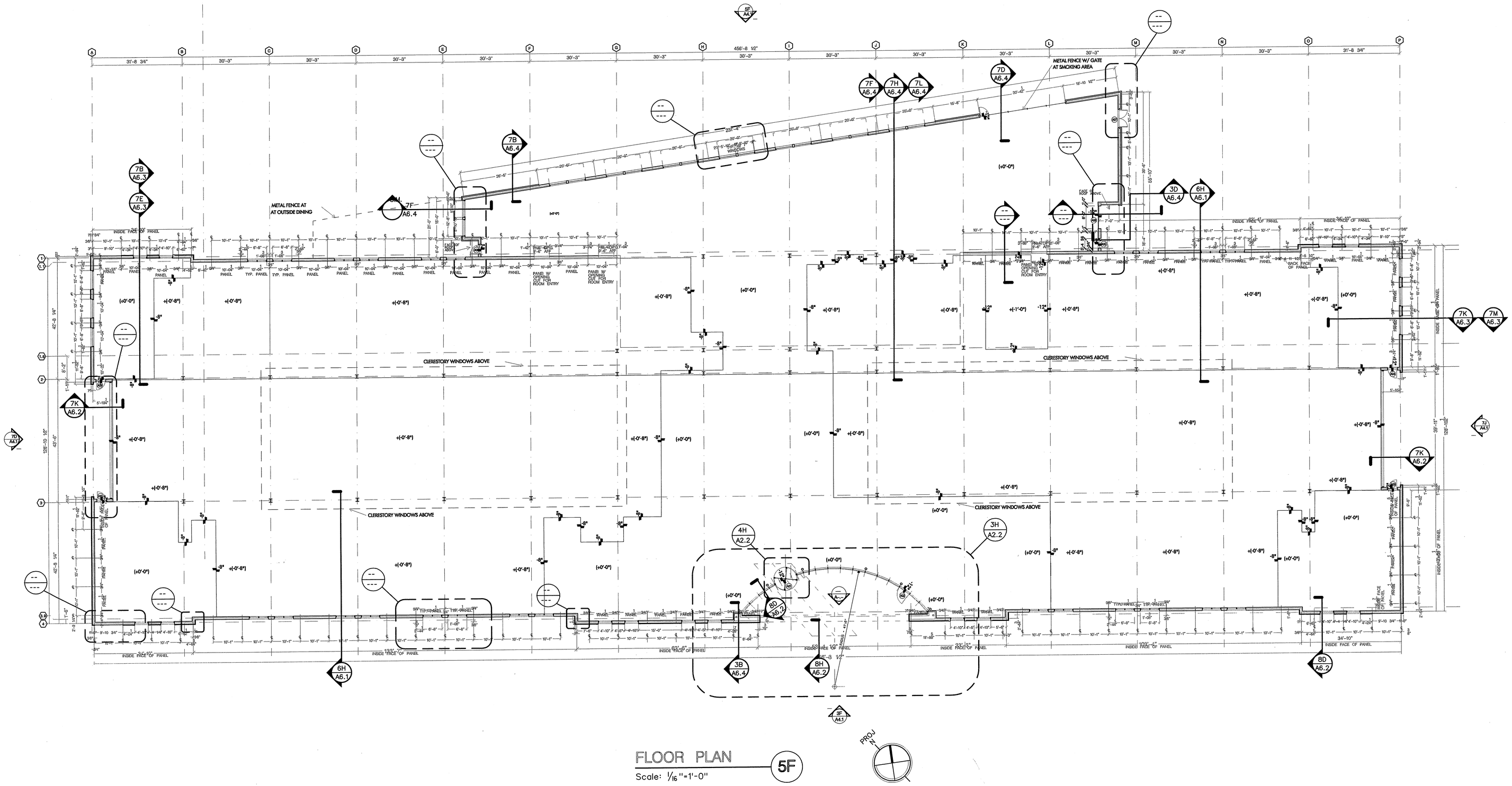
METAL FENCE AT OUTSIDE DINING
METAL FENCE W/ GATE AT SMOKING AREA
CLERESTORY WINDOWS ABOVE
INSIDE FACE OF PANEL
INSIDE FACE OF PANEL
INSIDE FACE OF PANEL

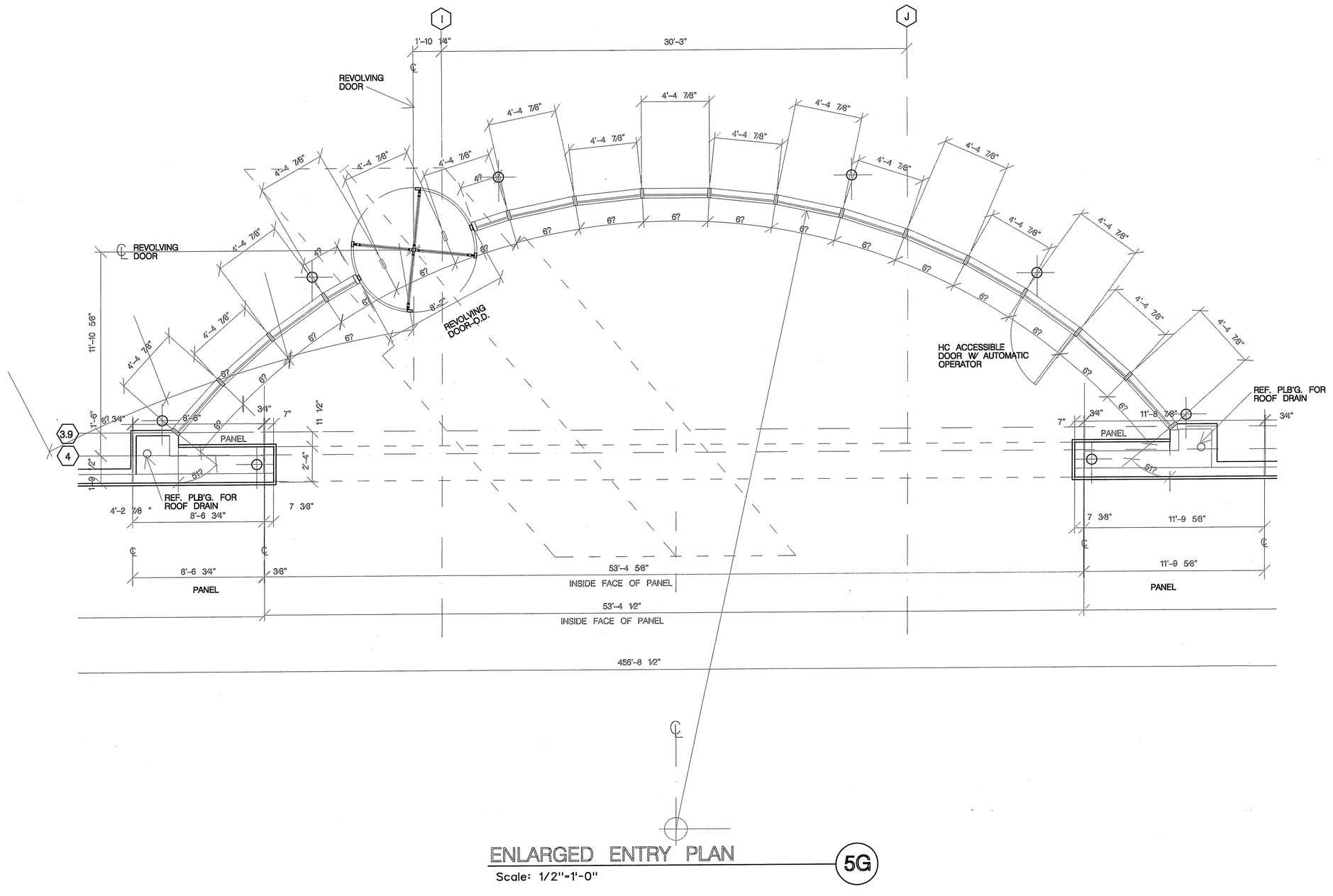

ENLARGED ENTRY PLAN 5G

Scale: 1/2"=1'-0"

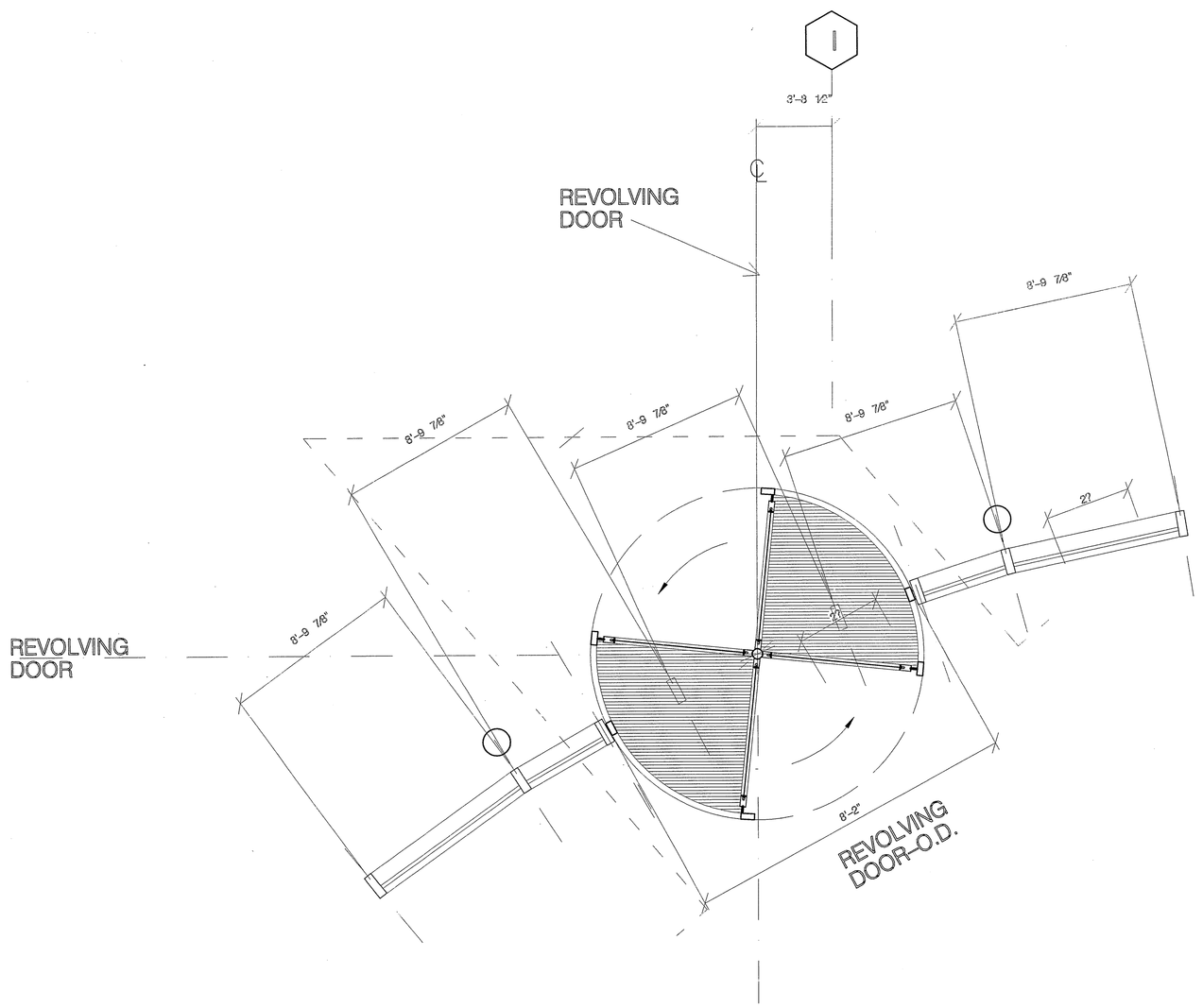

ENLARGED REVOLVING DOOR 9G

Scale: 1/2"=1'-0"

RECEIVED
MAY 08 2006
INTEGRA CONSTRUCTION, INC.

S&W
STEVENS & WILKINSON STAING & NEWDOW, INC.
ARCHITECTURE ENGINEERING INTERIORS
100 PEACHTREE STREET NW, SUITE 2500
ATLANTA, GA 30303
P 404.522.8888
F 404.521.8204
WWW.SW-SN.COM

idea|span
linking knowledge and design
A STEVENS & WILKINSON COMPANY
100 PEACHTREE STREET NW, SUITE 2400
ATLANTA, GA 30303
P 404.522.8899
F 404.521.6343
www.idea-span.com

■ SUBMITTALS

DATE	DESCRIPTION
04.24.06	INFORMAL RELEASE ON PRECAST
04.28.06	RELEASE ON PRECAST
05.08.06	PRICING PACKAGE

■ REVISIONS

DATE	DESCRIPTION

□ APPROVED FOR CONSTRUCTION
□ NOT APPROVED FOR CONSTRUCTION

THIS DRAWING IS THE PROPERTY OF STEVENS & WILKINSON STAING & NEWDOW, INC. UNAUTHORIZED USE OF ANY KIND, INCLUDING USE ON OTHER PROJECT IS PROHIBITED.
© STEVENS & WILKINSON STAING & NEWDOW, INC.

■ PROJECT NUMBER: 06041.00
■ DATE: 05.08.06
■ FILE: P:/PROJECTS/06041.00/DESIGN

cingular WIRELESS
PUEBLO, COLORADO

Enlarged Plans

A2.2

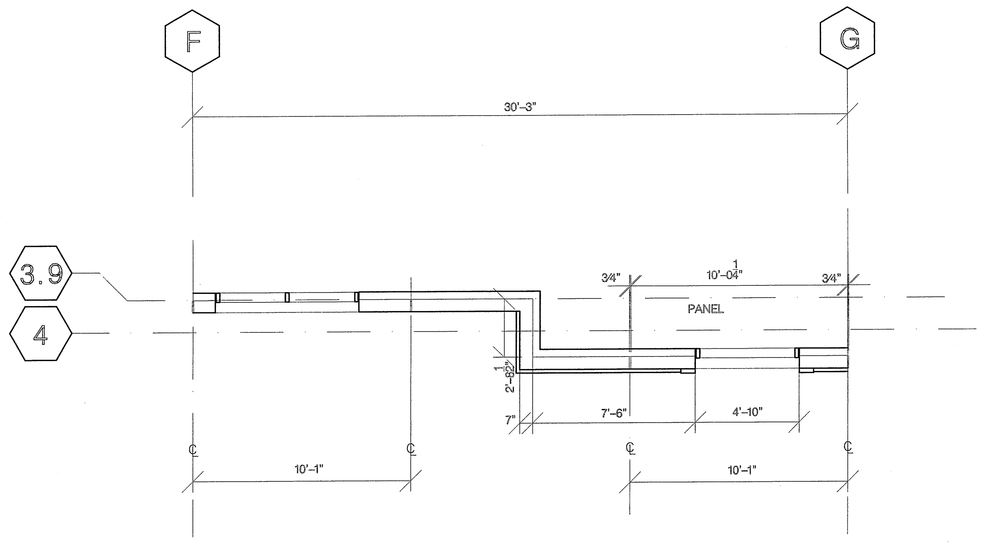

DETAIL PLAN 3C

Scale: 1/4"=1'-0"

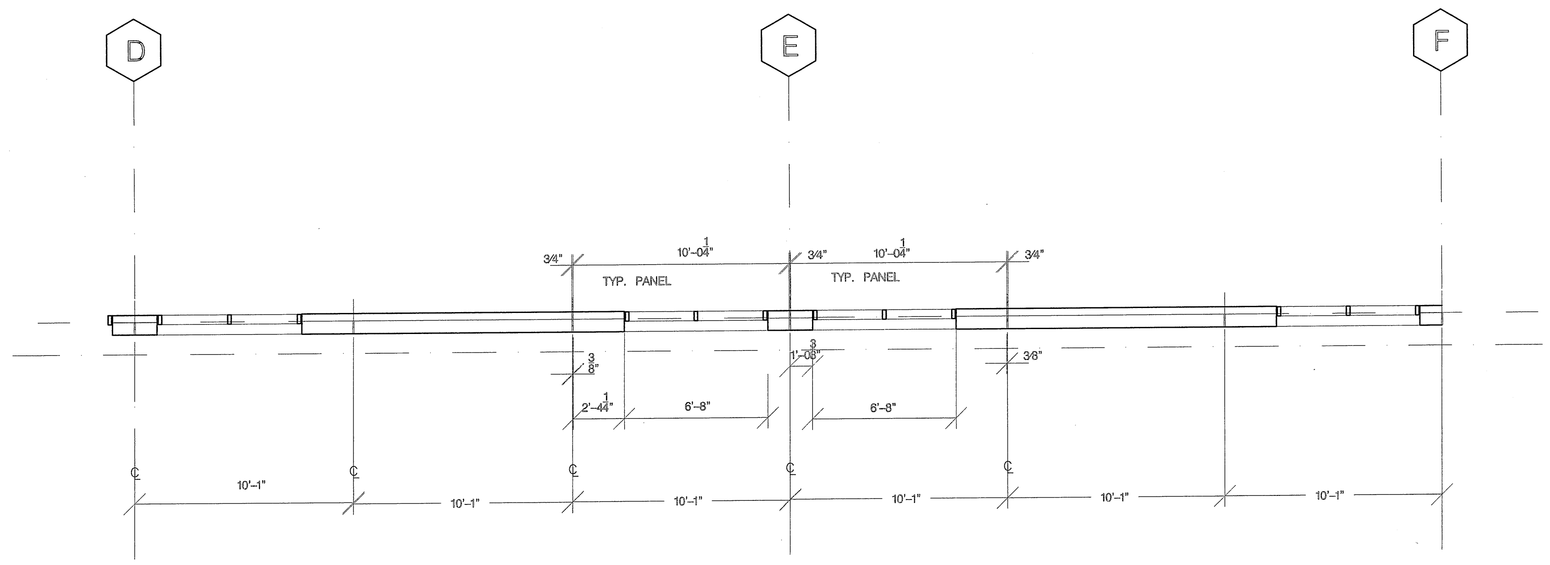

DETAIL PLAN 3H

Scale: 1/4"=1'-0"

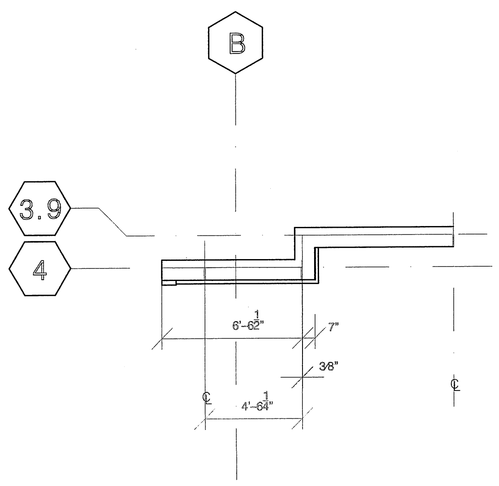

DETAIL PLAN 9A

Scale: 1/4"=1'-0"

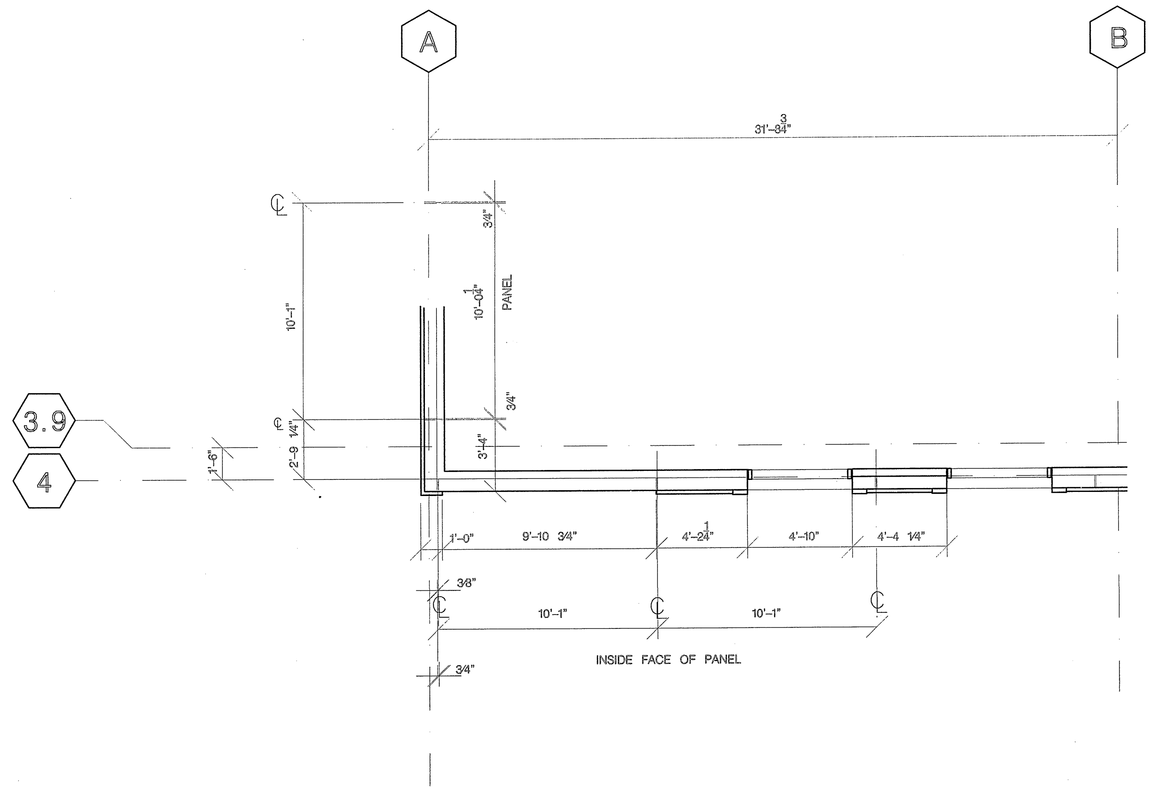

DETAIL PLAN 9E

Scale: 1/4"=1'-0"

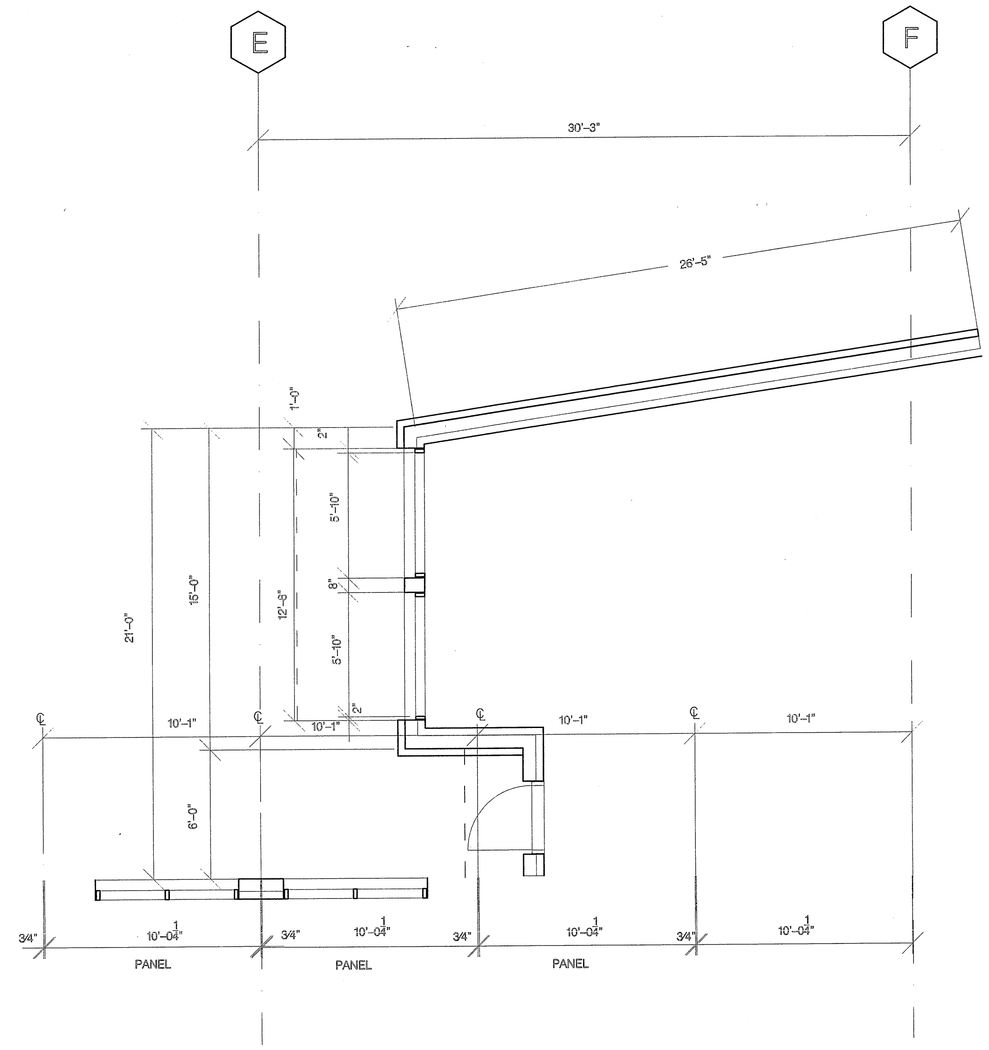

DETAIL PLAN 9J

Scale: 1/4"=1'-0"

RECEIVED
MAY 0 8 2006
INTEGRA CONSTRUCTION, INC.

S&W

100 PEACHTREE STREET NW, SUITE 2500
ATLANTA, GA 30303
P 404.522.8888
F 404.621.6204
WWW.SW-SN.COM

idea|span
linking knowledge and design
A STEVENS & WILKINSON COMPANY

100 PEACHTREE STREET NW, SUITE 2400
ATLANTA, GA 30303
P 404.522.8899
F 404.521.6343
www.idea-span.com

■ SUBMITTALS

DATE	DESCRIPTION
04.24.06	INFORMAL RELEASE ON PRECAST
04.26.06	RELEASE ON PRECAST
05.02.06	PRICING PACKAGE

■ REVISIONS

DATE	DESCRIPTION

□ APPROVED FOR CONSTRUCTION
□ NOT APPROVED FOR CONSTRUCTION

THIS DRAWING IS THE PROPERTY OF STEVENS & WILKINSON STANG & NEWDOW, INC. UNAUTHORIZED USE OF ANY KIND, INCLUDING USE ON OTHER PROJECT IS PROHIBITED.

© STEVENS & WILKINSON STANG & NEWDOW, INC.

■ PROJECT NUMBER: 05041.00
■ DATE: 05.02.06
■ FILE: P:/PROJECTS/05041.00/DESIGN

cingular WIRELESS
PUEBLO, COLORADO

Enlarged Plans

A2.3

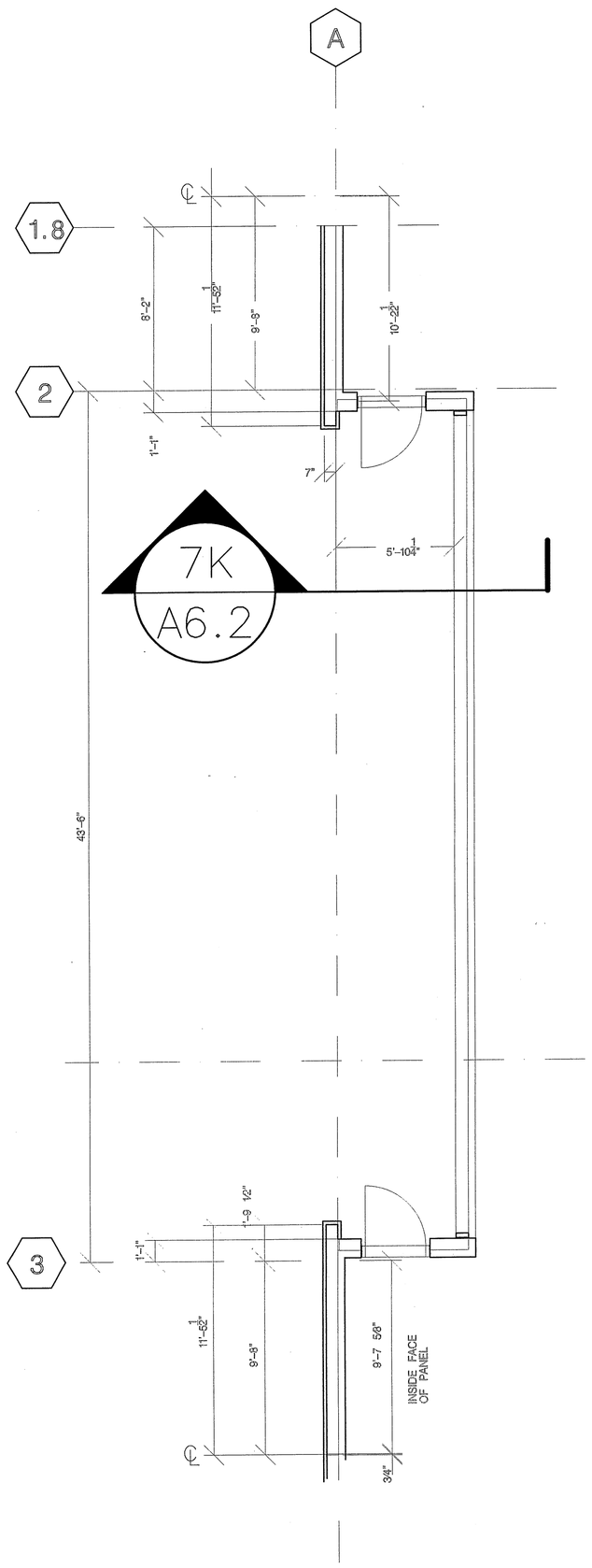

7K
A6.2

DETAIL PLAN
Scale: 1/4"=1'-0"
8A

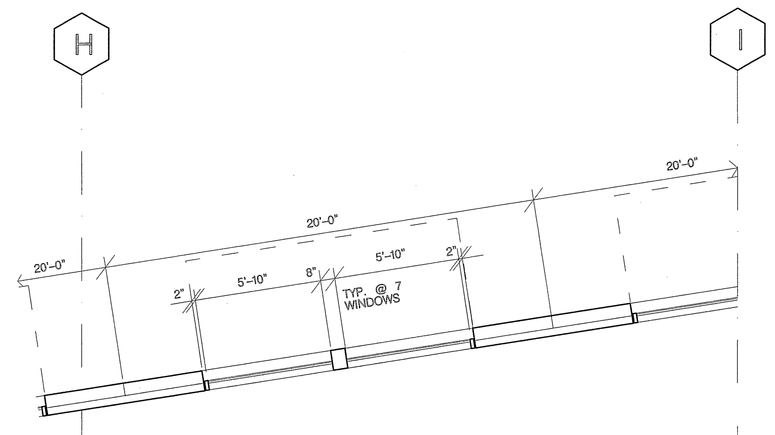

DETAIL PLAN
Scale: 1/4"=1'-0"
4E

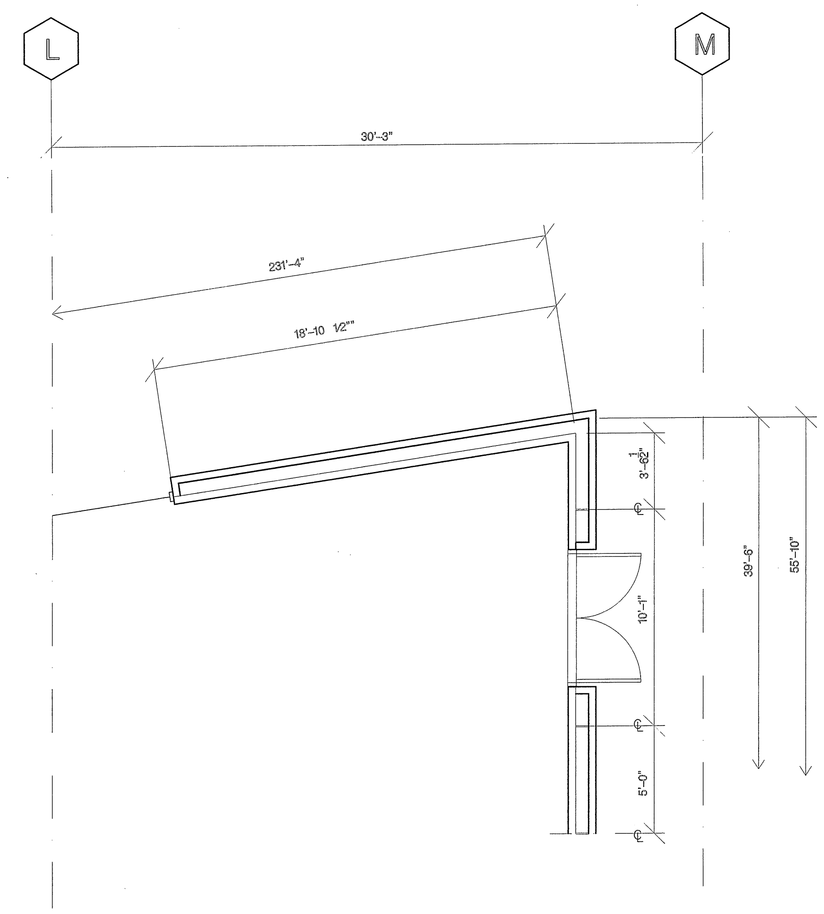

DETAIL PLAN
Scale: 1/4"=1'-0"
4J

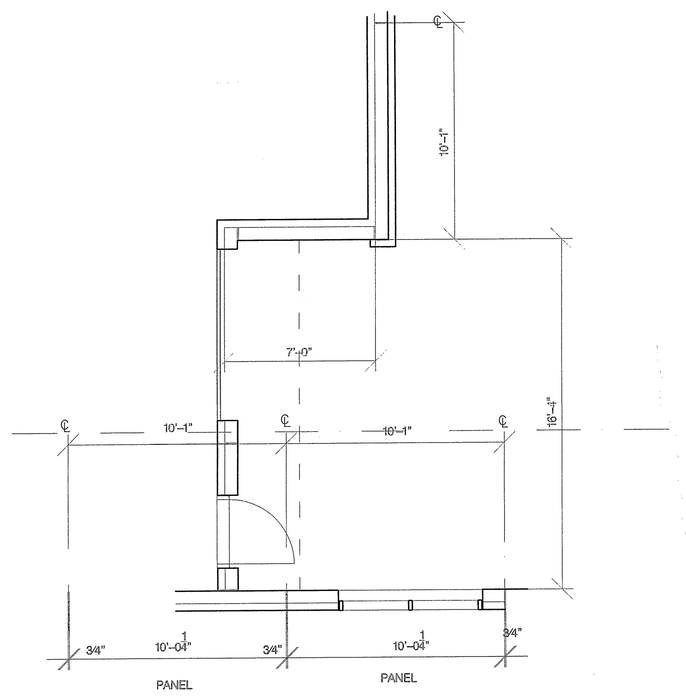

DETAIL PLAN
Scale: 1/4"=1'-0"
8E

RECEIVED
MAY 0 8 2006
INTEGRA CONSTRUCTION, INC.

S&W

100 PEACHTREE STREET NW, SUITE 2500
ATLANTA, GA 30303
P 404.522.8888
F 404.521.6204
WWW.SW-SN.COM

idea|span
linking knowledge and design
A STEVENS & WILKINSON COMPANY

100 PEACHTREE STREET NW, SUITE 2400
ATLANTA, GA 30303
P 404.522.8889
F 404.521.6343
www.idea-span.com

■ SUBMITTALS

DATE	DESCRIPTION
04.24.06	INFORMAL RELEASE ON PRECAST
04.28.06	RELEASE ON PRECAST
05.05.06	PRICING PACKAGE

■ REVISIONS

DATE	DESCRIPTION

□ APPROVED FOR CONSTRUCTION
□ NOT APPROVED FOR CONSTRUCTION

THIS DRAWING IS THE PROPERTY OF STEVENS & WILKINSON STANG & NEWDOW, INC. UNAUTHORIZED USE OF ANY KIND, INCLUDING USE ON OTHER PROJECT IS PROHIBITED.

©STEVENS & WILKINSON STANG & NEWDOW, INC.

■ PROJECT NUMBER: 05041.00
■ DATE: 05.08.06
■ FILE: P:/PROJECTS/05041.00/DESIGN

cingular WIRELESS
PUEBLO, COLORADO

Enlarged Plans

A2.4

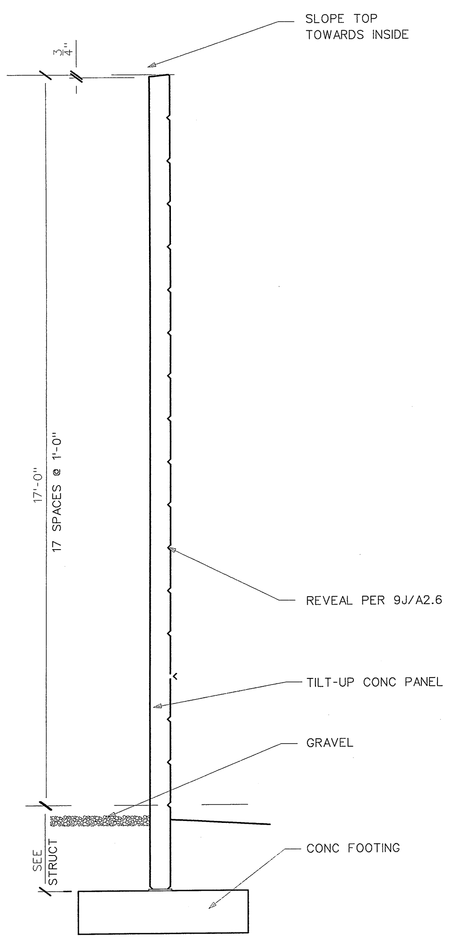

Section at Screen Wall 3C
"=1/2"

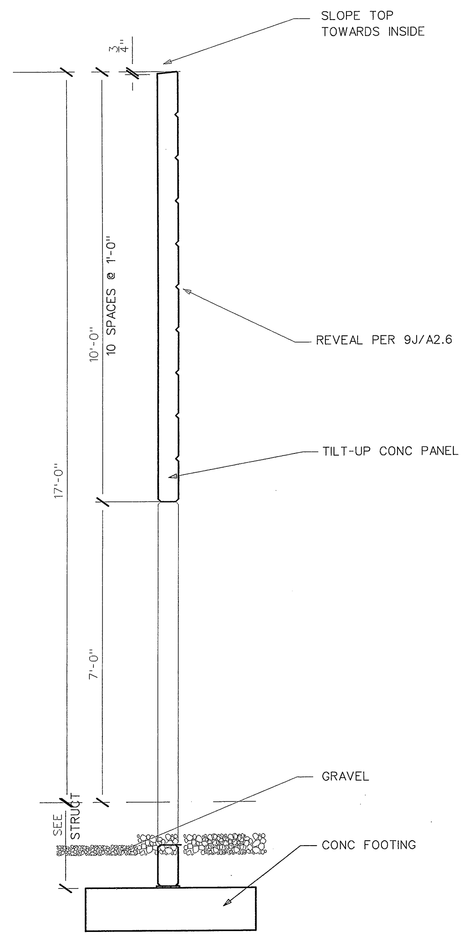

Section at Screen Wall 3E
1/2"=1'-0"

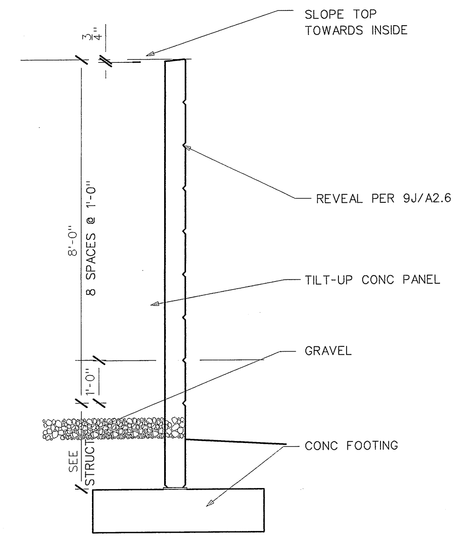

Section at Screen Wall 3G
1/2"=1'-0"

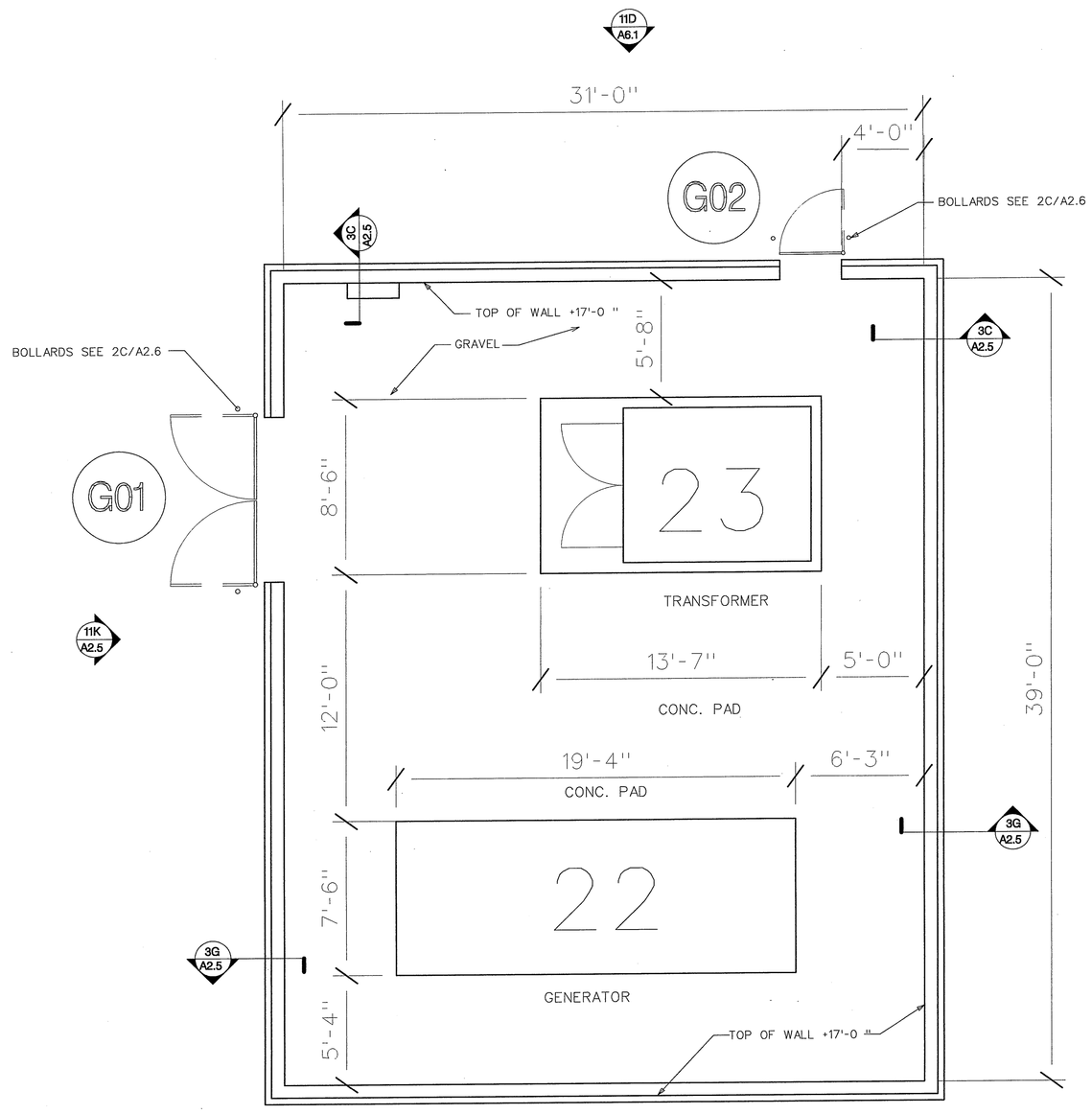

NOTE: PAINT ALL EXPOSED METAL AT ENCLOSURE TO MATCH COLOR 2

Plan at Generator Enclosure 8M
1/4"=1'-0"

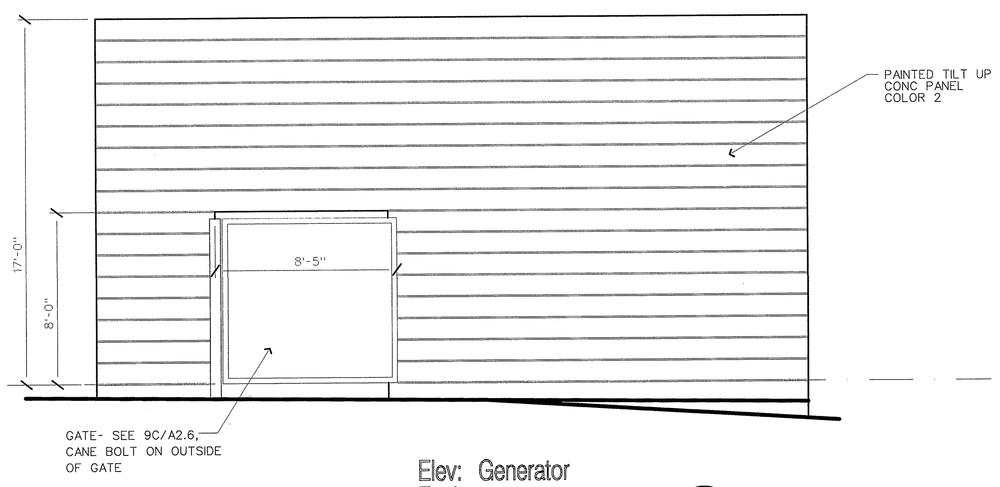

Elev: Generator Enclosure 11D
1/4"=1'-0"

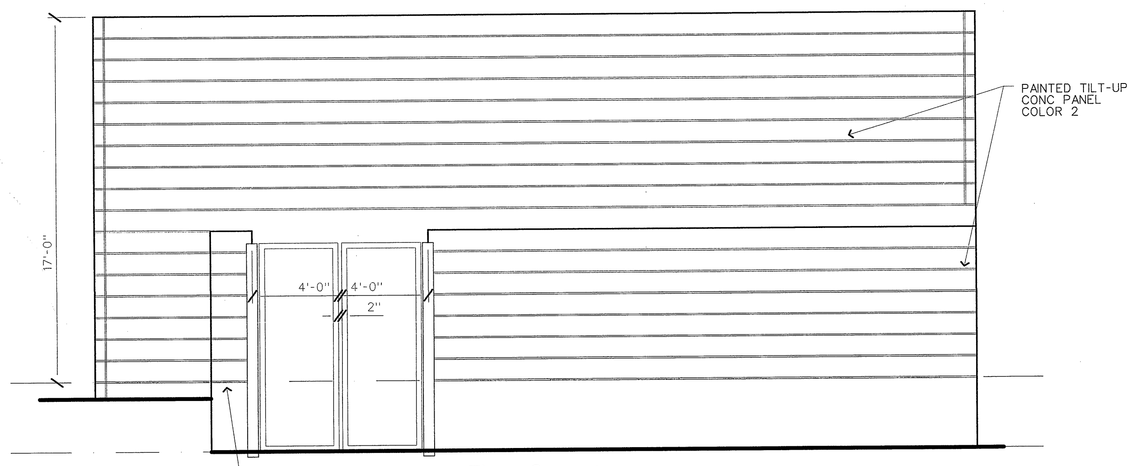

Elev: Generator Enclosure 11K
1/4"=1'-0"

RECEIVED
MAY 0 8 2006
INTEGRA CONSTRUCTION, INC.

S&W

100 PEACHTREE STREET NW, SUITE 2500
ATLANTA, GA 30303
P 404.522.8888
F 404.521.6204
WWW.SW-SN.COM

idea|span
linking knowledge and design
A STEVENS & WILKINSON COMPANY

100 PEACHTREE STREET NW, SUITE 2400
ATLANTA, GA 30303
P 404.522.8899
F 404.521.6343
www.idea-span.com

■ SUBMITTALS

DATE	DESCRIPTION
04.24.06	INFORMAL RELEASE ON PRECAST
04.26.06	RELEASE ON PRECAST
05.08.06	PRICING PACKAGE

■ REVISIONS

DATE	DESCRIPTION

□ APPROVED FOR CONSTRUCTION
□ NOT APPROVED FOR CONSTRUCTION

THIS DRAWING IS THE PROPERTY OF STEVENS & WILKINSON STANG & NEWDOW, INC. UNAUTHORIZED USE OF ANY KIND, INCLUDING USE ON OTHER PROJECT IS PROHIBITED.

© STEVENS & WILKINSON STANG & NEWDOW, INC.

■ PROJECT NUMBER: 06041.00
■ DATE: 05.08.06
■ FILE: F:/PROJECTS/06041.00/DESIGN

cingular WIRELESS
PUEBLO, COLORADO

Enlarged Plans

A2.5

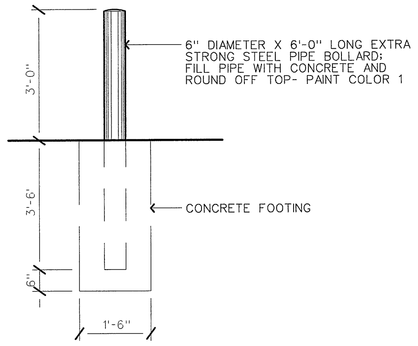

Bollard Section

½"=1'-0"

2C

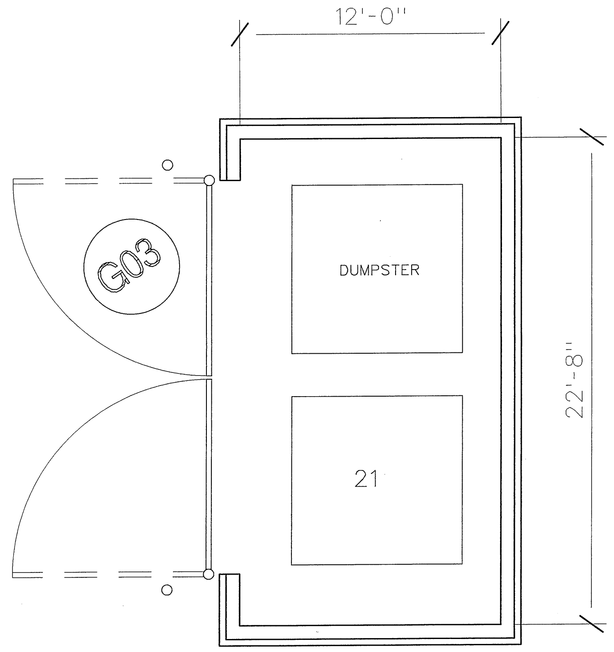

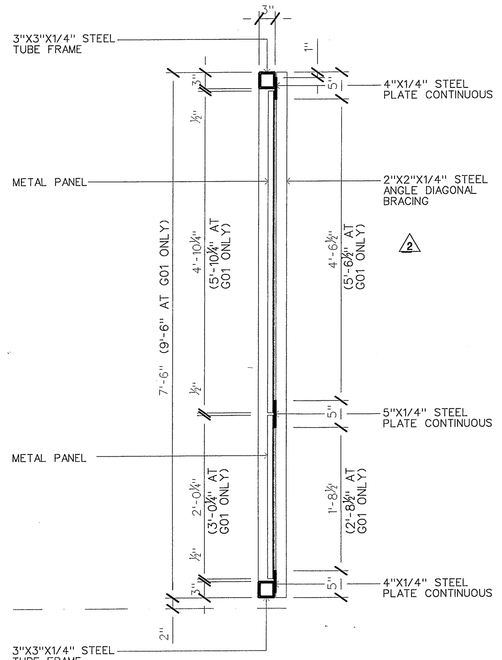

Section at Gate

¾"=1'-0"

5C

NOTE: METAL PANELS AT GATES SHALL BE CENTRIA "STYLE-RIB", OR APPROVED EQUAL, 1½" DEEP, 36" COVERAGE, 7.2" O.C. RIB SPACING, KYNAR FINISH IN COLOR 7, PANELS SHALL BE 20 GA MINIMUM.

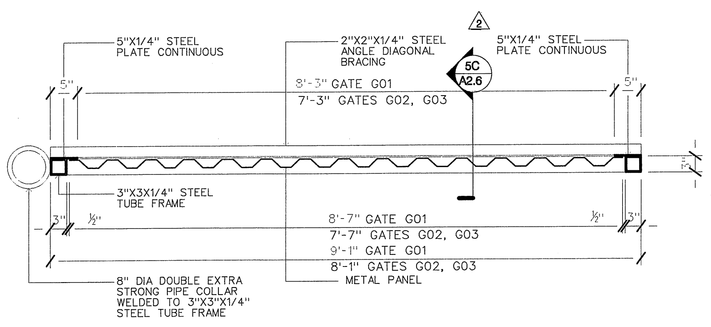

Plan at Gate

¾"=1'-0"

9C

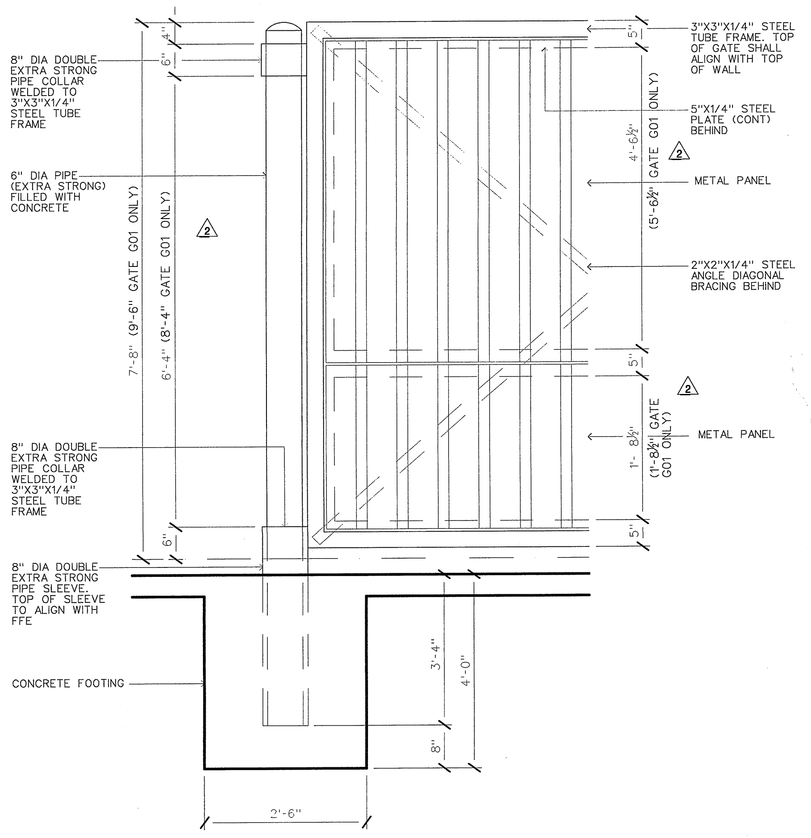

Detail at Gate

¾"=1'-0"

11G

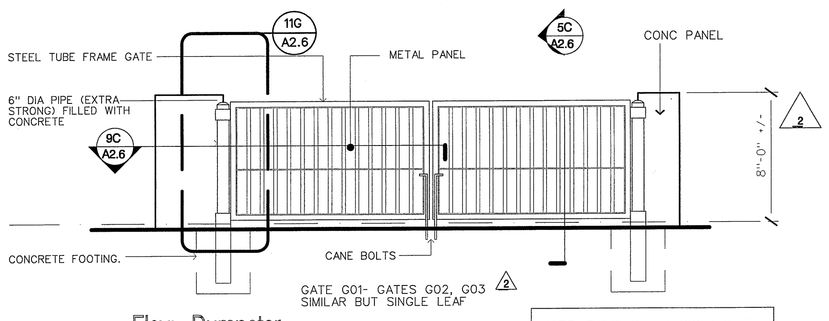

Elev: Dumpster Enclosure Gate

1/4"=1'-0"

11C

NOTE: PAINT ALL EXPOSED STEEL AND STEEL DECK AT ENCLOSURE TO MATCH COLOR 2

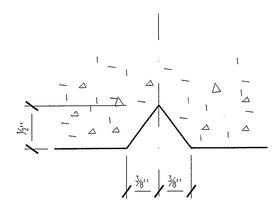

Detail at Reveal Joint

FULL SCALE

9J

RECEIVED
MAY 0 8 2006
INTEGRA CONSTRUCTION, INC.

S&W

100 PEACHTREE STREET NW, SUITE 2500
ATLANTA, GA 30303
P 404.522.8888
F 404.521.8204
WWW.SW-SN.COM

idea|span
linking knowledge and design
A STEVENS & WILKINSON COMPANY

100 PEACHTREE STREET NW, SUITE 2400
ATLANTA, GA 30303
P 404.522.8899
F 404.521.6343
www.idea-span.com

■ SUBMITTALS

DATE	DESCRIPTION
04.24.06	INFORMAL RELEASE ON PRECAST
04.28.06	RELEASE ON PRECAST
05.02.06	PRICING PACKAGE

■ REVISIONS

DATE	DESCRIPTION

□ APPROVED FOR CONSTRUCTION
□ NOT APPROVED FOR CONSTRUCTION

THIS DRAWING IS THE PROPERTY OF STEVENS & WILKINSON STANG & NEWDOW, INC. UNAUTHORIZED USE OF ANY KIND, INCLUDING USE ON OTHER PROJECT IS PROHIBITED.

© STEVENS & WILKINSON STANG & NEWDOW, INC.

■ PROJECT NUMBER: 06041.00
■ DATE: 05.02.06
■ FILE: F:/PROJECTS/06041.00/DESIGN

cingular WIRELESS

PUEBLO, COLORADO

Enlarged Plans

A2.6

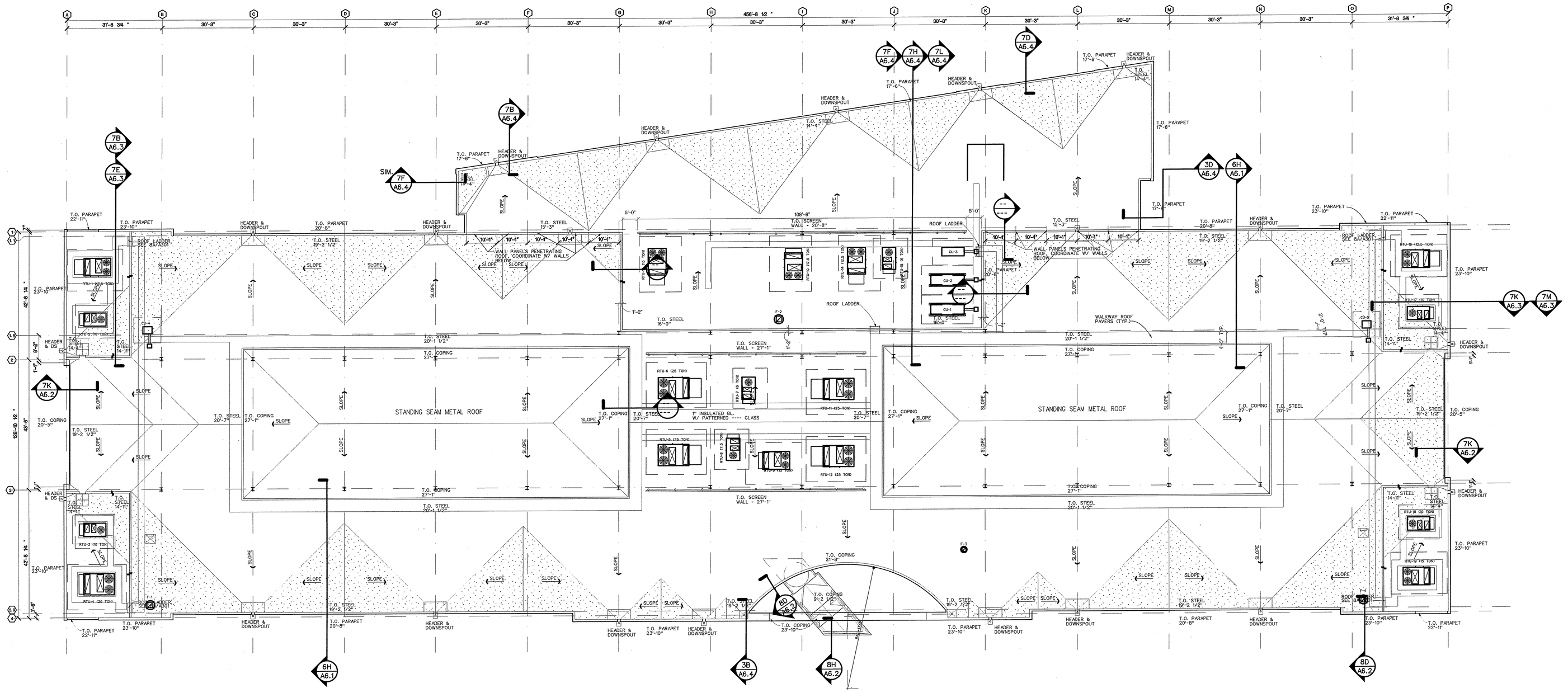

ROOF PLAN

Scale: 1/16"=1'-0" (5F)

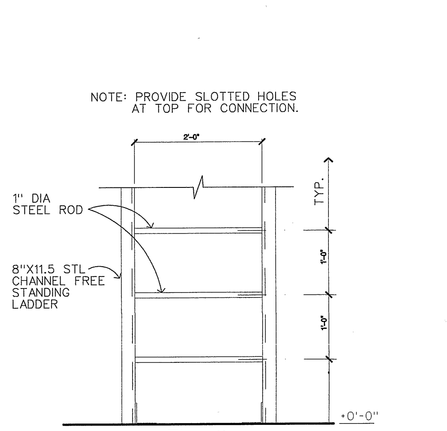

Roof Ladder Detail (8A)

¾"=1'-0"

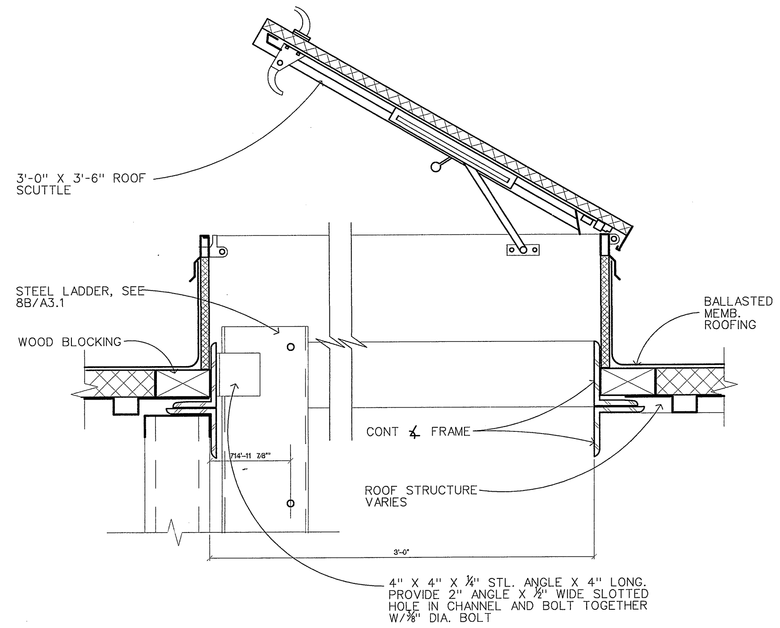

Roof Hatch Detail (8D)

¾"=1'-0"

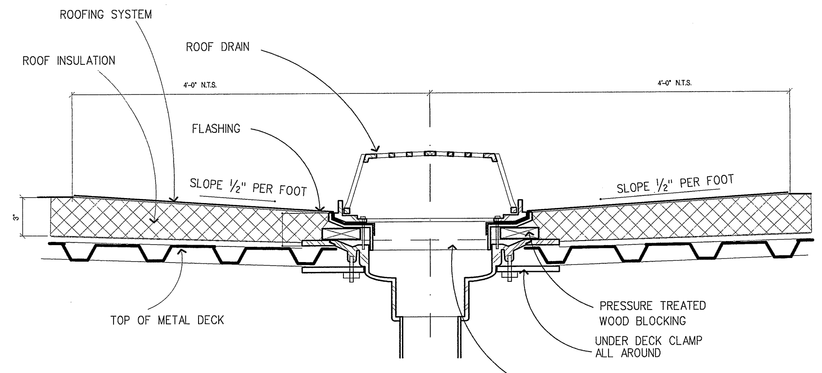

Roof Drain Detail (—)

1½"=1'-0"

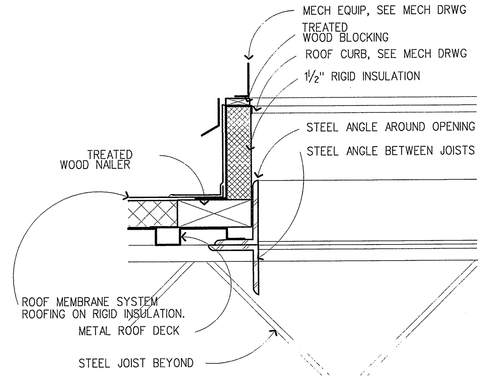

Equip. Curb Detail (—)

1½"=1'-0"

TYPICAL ROOF NOTES:

NOTE: SUBMIT BALLAST SAMPLES FOR APPROVAL OF COLOR AND SIZE PRIOR TO PURCHASING BALLAST. THE BALLAST WILL BE VISIBLE IN THE FINAL WORK

NOTE: INSTALL ALL SLOPED INSULATION, CRICKETS, AND SLOPED SUMPS SO THAT THE TOP EDGE OF THE SLOPED INSULATION ALIGNS WITH THE TOP SURFACE OF THE ADJACENT ROOF INSULATION. FOR INSTANCE, IF THE MINIMUM THICKNESS OF THE SLOPED INSULATION IS 2", REDUCE THE TYPICAL 3" THICK INSULATION TO 2" UNDER THE SLOPED INSULATION.

NOTE: SEE 9E/A3.1 FOR TYPICAL CURB AT ROOF EQUIPMENT

NOTE: SEE A2.2 FOR ROOF WALKWAY LOCATIONS.

NOTE: ROOF SLOPES BETWEEN COLUMN LINES 4 AND 7 SHALL BE ¼" PER FOOT (2%) MINIMUM.

NOTE: LOCATE PENETRATIONS THROUGH ROOF FOR LIGHTNING PROTECTION CONNECTIONS A MINIMUM OF 6 FEET FROM OUTSIDE FACE OF THE BUILDING.

SLOPED ROOF INSULATION

RD ROOF DRAIN- SEE 6C/A3.1

OD OVERFLOW DRAIN- SEE 6C/A3.1 SIM

NOTE: ROOF INSULATION SHALL BE 3" THICK TYPICAL, EXCEPT AS INDICATED FOR SLOPED INSULATION. ROOF INSULATION SHALL BE 1 " THICK AT HEADERS, THEN SLOPE AT 1/2 " PER FOOT FOR FOUR FEET IN ALL DIRECTIONS TO ACHIEVE A THICKNESS OF 3". TONED AREAS REPRESENT SLOPED INSULATION AT 1/4 " PER FOOT ON TOP OF 3" INSULATION. ALL INSULATION SHALL BE INSTALLED ON TOP OF 5/8 " TYPE X GYPSUM BOARD

TONED AREAS REPRESENT SLOPED INSULATION AT ¼" PER FOOT ON TOP OF 3" INSULATION.

NOTE: ALL ROOFING SHALL BE BALLASTED SINGLE PLY ROOFING EXCEPT AS NOTED. BALLAST SHALL BE APPLIED AS REQUIRED BY FM 128 FOR — MPH WIND ZONES

— GAS PIPING- SEE SECTION —

RECEIVED
MAY 08 2006
INTEGRA CONSTRUCTION, INC.

S&W

100 PEACHTREE STREET NW, SUITE 2500
ATLANTA, GA 30303
P 404.522.8888
F 404.521.6204
WWW.SW-SN.COM

idea|span
linking knowledge and design
A STEVENS & WILKINSON COMPANY

100 PEACHTREE STREET NW, SUITE 2400
ATLANTA, GA 30303
P 404.521.8899
F 404.521.6343
www.idea-span.com

■ SUBMITTALS

DATE	DESCRIPTION
04.24.06	INFORMAL RELEASE ON PRECAST
04.28.06	RELEASE ON PRECAST
05.00.06	PRICING / PERMIT SET

■ REVISIONS

DATE	DESCRIPTION

□ APPROVED FOR CONSTRUCTION
□ NOT APPROVED FOR CONSTRUCTION

THIS DRAWING IS THE PROPERTY OF STEVENS & WILKINSON STANG & NEWDOW, INC. UNAUTHORIZED USE OF ANY KIND, INCLUDING USE ON OTHER PROJECTS IS PROHIBITED.

© STEVENS & WILKINSON STANG & NEWDOW, INC.

■ PROJECT NUMBER: 06041.00
■ DATE: 05.08.06
■ FILE: P:/PROJECTS/06041.00/DESIGN

cingular WIRELESS
PUEBLO, COLORADO

ROOF PLAN

A3.1

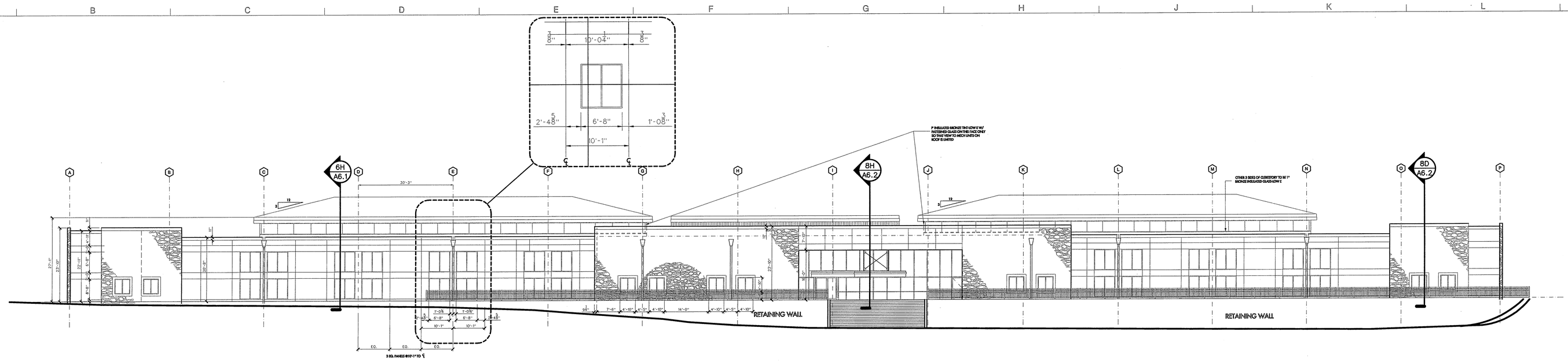

South Elevation
1/16"=1'-0"
3F

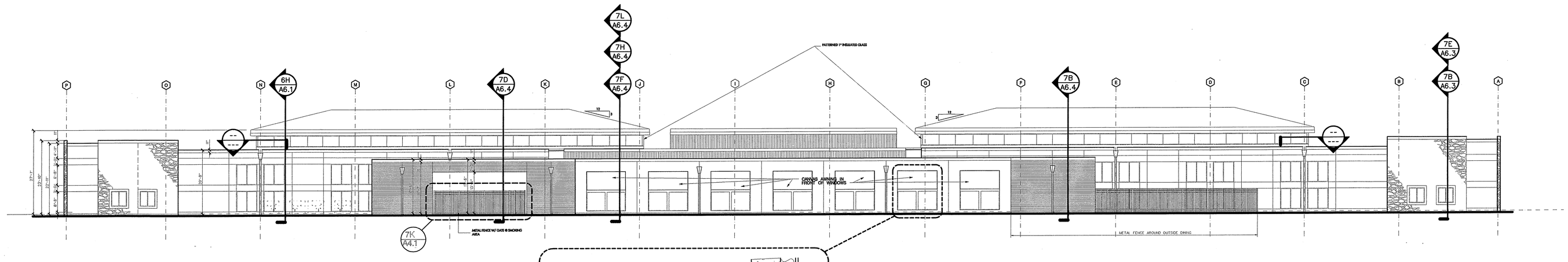

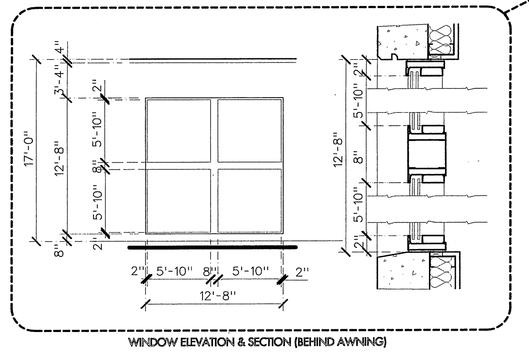

WINDOW ELEVATION & SECTION (BEHIND AWNING)

North Elevation
1/16"=1'-0"
5F

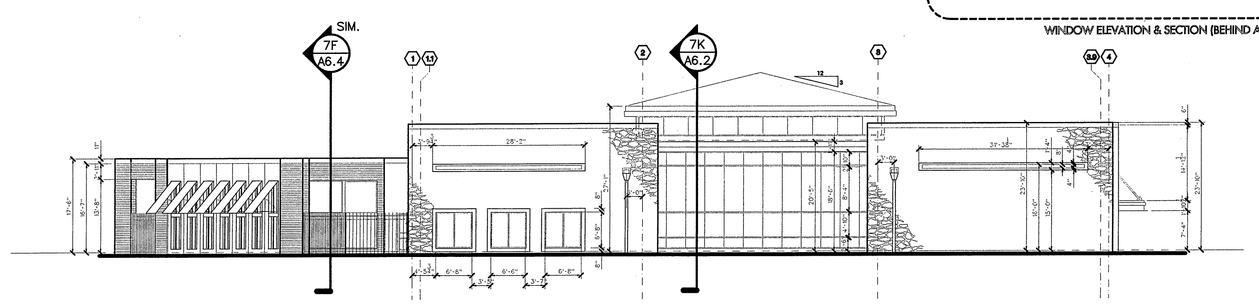

West Elevation
1/16"=1'-0"
7D

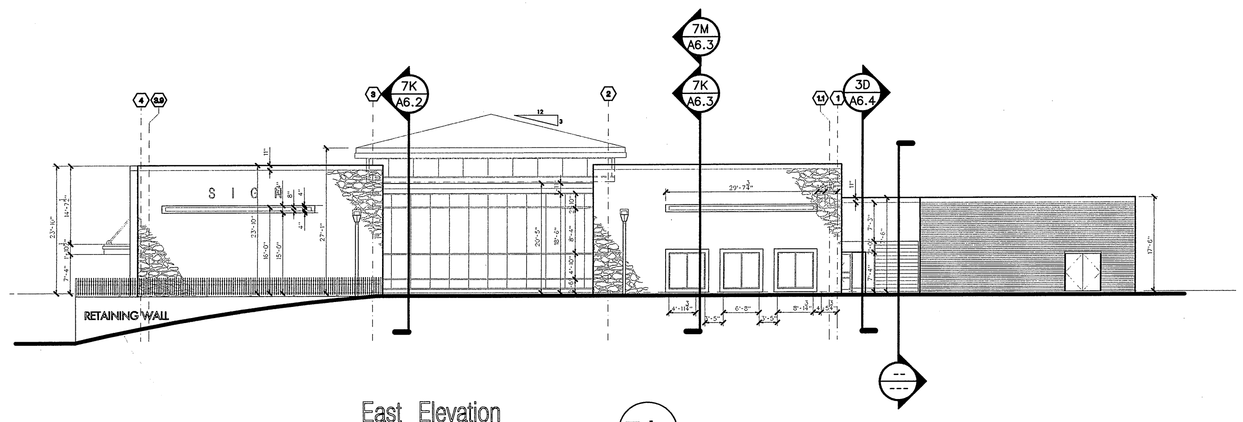

East Elevation
1/16"=1'-0"
7J

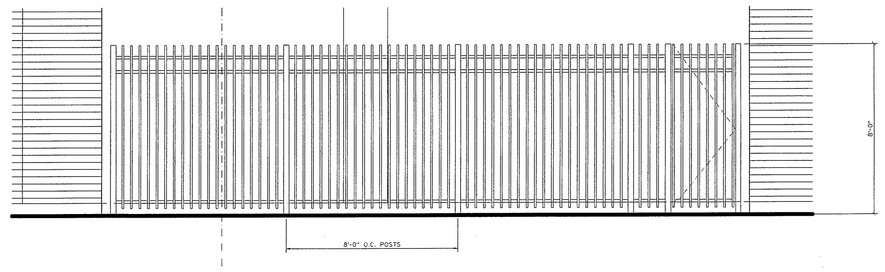

Fence Elevation
1/4"=1'-0"
7K

SEALANT COLOR SCHEDULE:

SEALANT COLOR SHALL BE AS FOLLOWS:

1. SEALANT TO MATCH COLOR 1: -JOINTS BETWEEN CONCRETE PANELS PAINTED COLOR 1
   -JOINTS BETWEEN STOREFRONT AND CONC PAINTED COLOR 1
2. SEALANT TO MATCH COLOR 2: -JOINTS BETWEEN CONCRETE PANELS PAINTED COLOR 2
   -JOINTS BETWEEN CONCRETE PANELS AND HM DOOR FRAMES
   -JOINTS BETWEEN STOREFRONT AND CONC PAINTED COLOR 2
3. SEALANT TO MATCH COLOR 3: JOINTS BETWEEN CONCRETE PANELS PAINTED COLOR 3
   JOINTS BETWEEN STOREFRONT AND CONC PAINTED COLOR 3

COLOR SCHEDULE:

COLOR:	DESCRIPTION:	
1 (LIGHT COLOR)	BENJAMIN MOORE	CLAY BEIGE OC-11
2 (MEDIUM COLOR)	BENJAMIN MOORE	BERKSHIRE BEIGE AC-2
3 (DARK COLOR)	BENJAMIN MOORE	COPLEY GRAY HC-104

RECEIVED
MAY 08 2006
INTEGRA CONSTRUCTION, INC.

S&W

100 PEACHTREE STREET NW, SUITE 2500
ATLANTA, GA 30303
P 404.522.8888
F 404.521.6204
WWW.SW-SN.COM

idea|span
linking knowledge and design
A STEVENS & WILKINSON COMPANY

100 PEACHTREE STREET NW, SUITE 2400
ATLANTA, GA 30303
P 404.522.8899
F 404.521.6343
www.idea-span.com

■ SUBMITTALS

DATE	DESCRIPTION
04.24.06	INFORMAL RELEASE ON PRECAST
04.28.06	RELEASE ON PRECAST
05.05.06	PRICING / PERMIT SET

■ REVISIONS

DATE	DESCRIPTION

□ APPROVED FOR CONSTRUCTION
□ NOT APPROVED FOR CONSTRUCTION

THIS DRAWING IS THE PROPERTY OF STEVENS & WILKINSON STAING & NEWDOW, INC. UNAUTHORIZED USE OF ANY KIND, INCLUDING USE ON OTHER PROJECT IS PROHIBITED.
© STEVENS & WILKINSON STAING & NEWDOW, INC.

■ PROJECT NUMBER: 05041.00
■ DATE: 05.05.06
■ FILE: P:/PROJECTS/05041.00/DESIGN

cingular WIRELESS
PUEBLO, COLORADO

EXTERIOR ELEVATIONS

A4.1

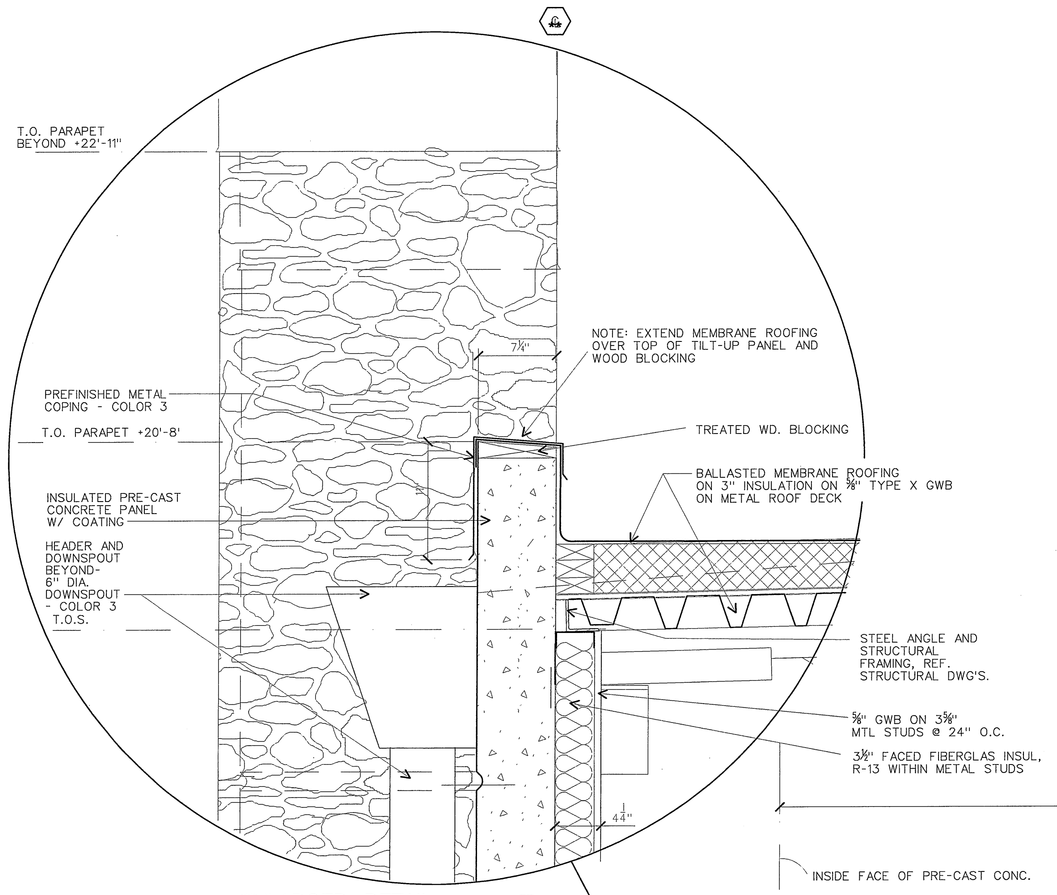

ENLARGED DETAIL 2C
1½"=1'-0"

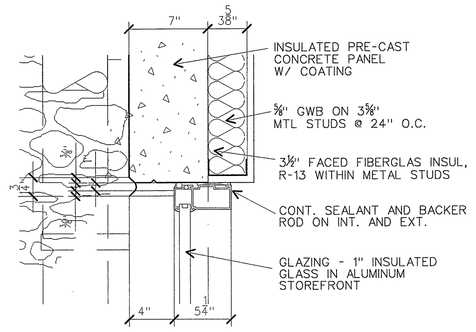

HEAD DETAIL 2G
1½"=1'-0"

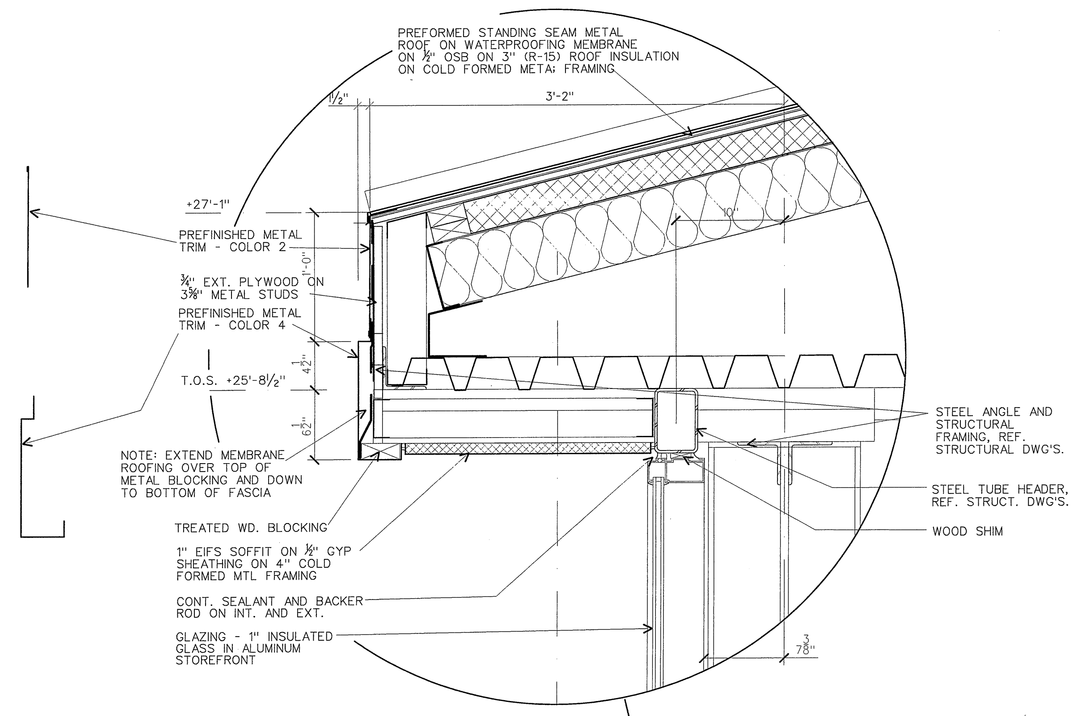

ENLARGED DETAIL 2M
1½"=1'-0"

42'-8¼"

T.O.S. +25'-8½"
T.O. PARAPET +23'-10" AT STONE VENEERED PANELS
T.O. PARAPET +22'-11"
T.O. PARAPET +20'-8"
T.O.S. +19'-2½"
6'-6"
3'-8½"
11"
4'-8"
3'-2½"
6'-8"
20'-8"
19'-2½"
2'-0"
7'-4"
8"
6'-8" MASONRY OPENING
PREFINISHED METAL COPING
HEADER AND DOWNSPOUT BEYOND- 6" DIA. DOWNSPOUT
INSULATED PRE-CAST CONCRETE PANEL W/ COATING
2G A6.1
STOREFRONT
7G A6.1
⅝" GWB ON 3⅝" MTL STUDS @ 24" O.C.
3½" FACED FIBERGLAS INSUL, R-13 WITHIN METAL STUDS
2G A6.1
STOREFRONT
CONCRETE SLAB ON VAPOR BARRIER ON GRANULAR BASE
RAISED FLOORING

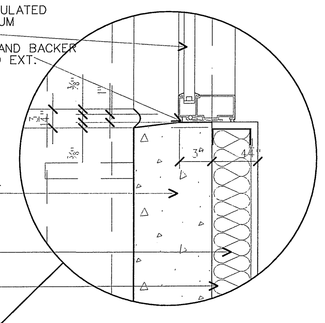

SILL DETAIL 7G
1½"=1'-0"

PREFINISHED METAL TRIM
1" EIFS SOFFIT ON ½" GYP SHEATHING ON 4" COLD FORMED MTL FRAMING
4'-0" WIDE WALKWAY PAVERS
BALLASTED MEMBRANE ROOFING ON SLOPED 3" INSULATION ON ⅝" TYPE X GWB ON METAL ROOF DECK
5'-7"
T.O.S. +20-1 1/2"
19'-7¾"
8"

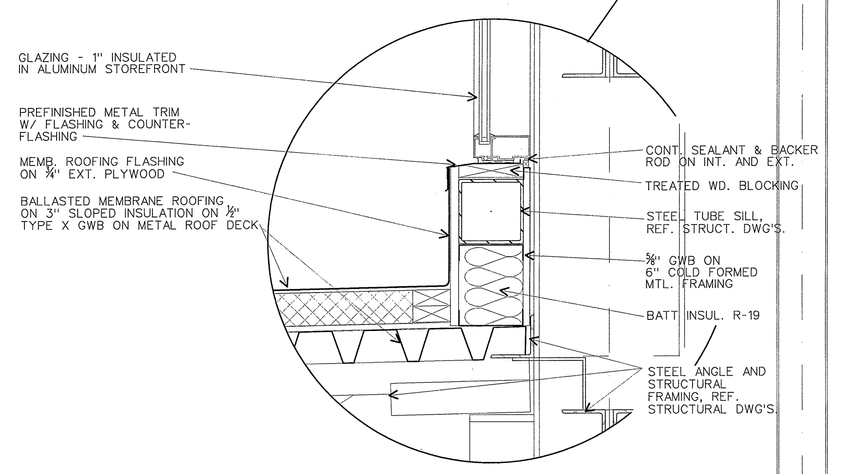

ENLARGED DETAIL 7L
1½"=1'-0"

RECEIVED
MAY 0 8 2006
INTEGRA CONSTRUCTION, INC.

Section 6H
½"=1'-0"

S&W
100 PEACHTREE STREET NW, SUITE 2500
ATLANTA, GA 30303
P 404.522.8888
F 404.521.6206
WWW.SW-SN.COM

idea|span
linking knowledge and design
A STEVENS & WILKINSON COMPANY
100 PEACHTREE STREET NW, SUITE 2400
ATLANTA, GA 30303
P 404.522.8899
F 404.521.6343
www.idea-span.com

■ SUBMITTALS

DATE	DESCRIPTION
04.24.06	INFORMAL RELEASE ON PRECAST
04.28.06	RELEASE ON PRECAST
05.08.06	PRICING / PERMIT SET

■ REVISIONS

DATE	DESCRIPTION

□ APPROVED FOR CONSTRUCTION
□ NOT APPROVED FOR CONSTRUCTION

THIS DRAWING IS THE PROPERTY OF STEVENS & WILKINSON STANG & NEWDOW, INC. UNAUTHORIZED USE OF ANY KIND, INCLUDING USE ON OTHER PROJECT IS PROHIBITED.
© STEVENS & WILKINSON STANG & NEWDOW, INC.

■ PROJECT NUMBER: 06041.00
■ DATE: 05.08.06
■ FILE: P:/PROJECTS/06041.00/DESIGN

cingular WIRELESS
PUEBLO, COLORADO

SECTIONS

A6.1

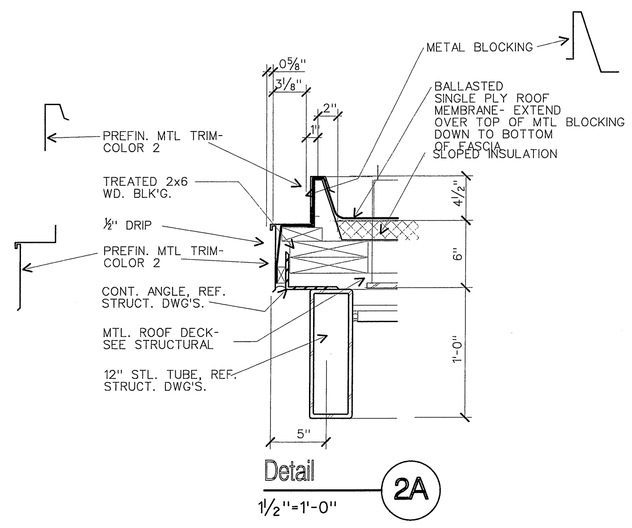

Detail 2A
1½"=1'-0"

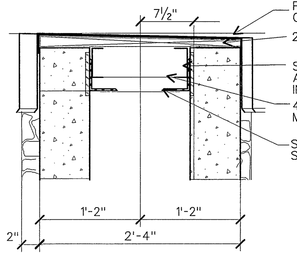

Detail 1D
1"=1'-0"

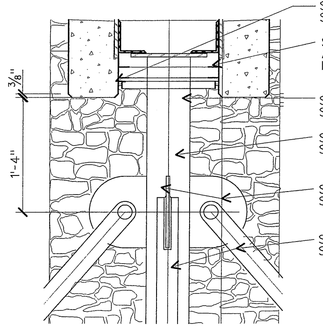

Detail 2D
1"=1'-0"

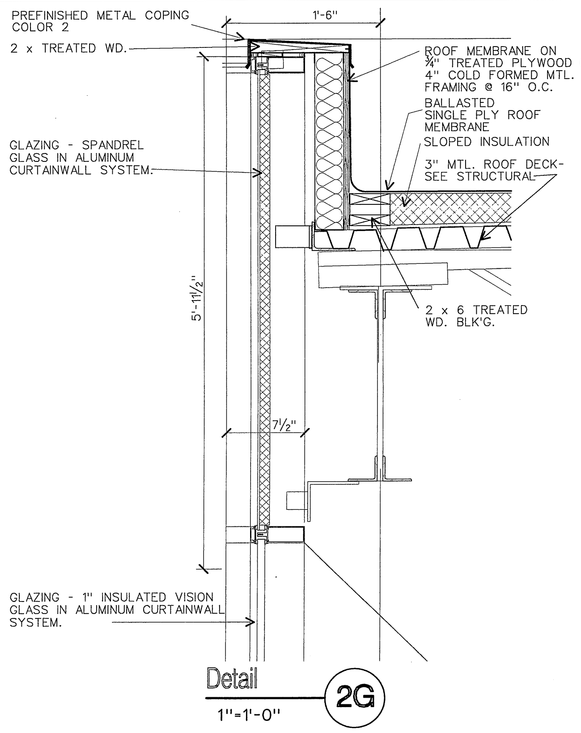

Detail 2G
1"=1'-0"

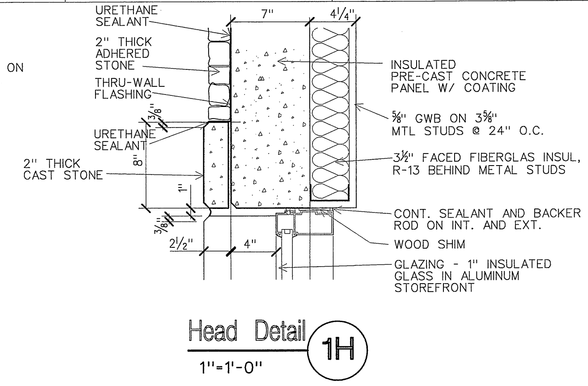

Head Detail 1H
1"=1'-0"

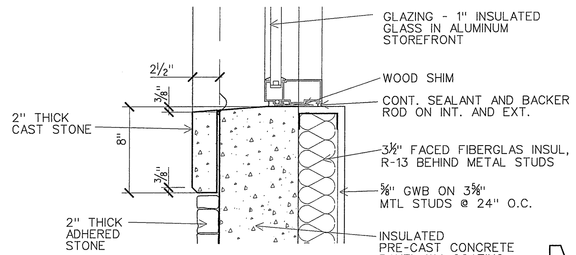

Sill Detail 3H
1"=1'-0"

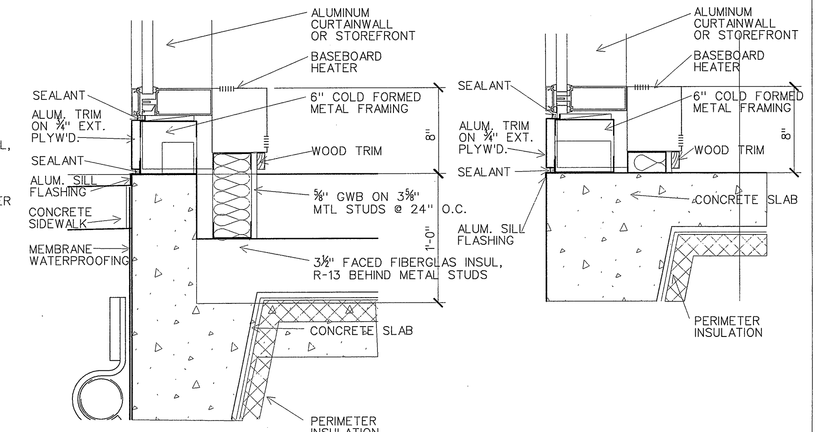

Detail 2K
1½"=1'-0"

Detail 2M
1½"=1'-0"

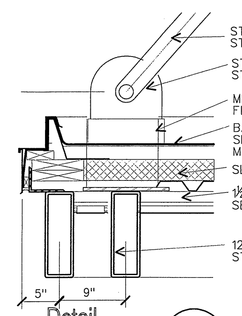

Detail 4B
1"=1'-0"

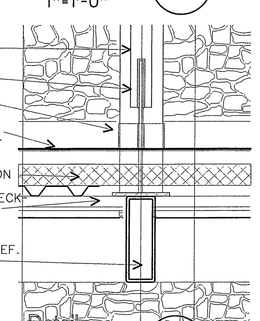

Detail 4D
1"=1'-0"

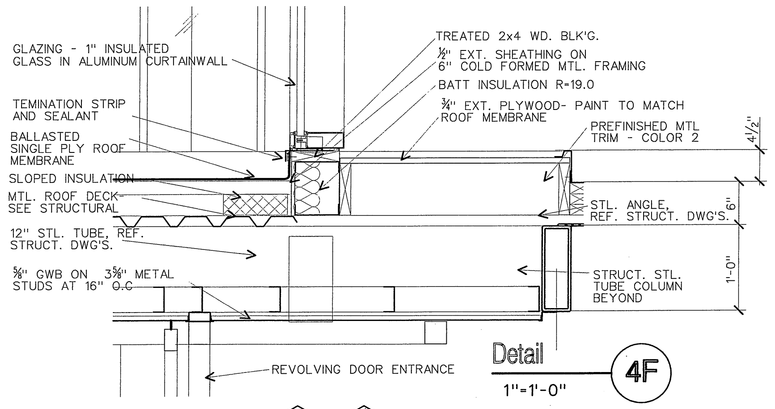

Detail 4F
1"=1'-0"

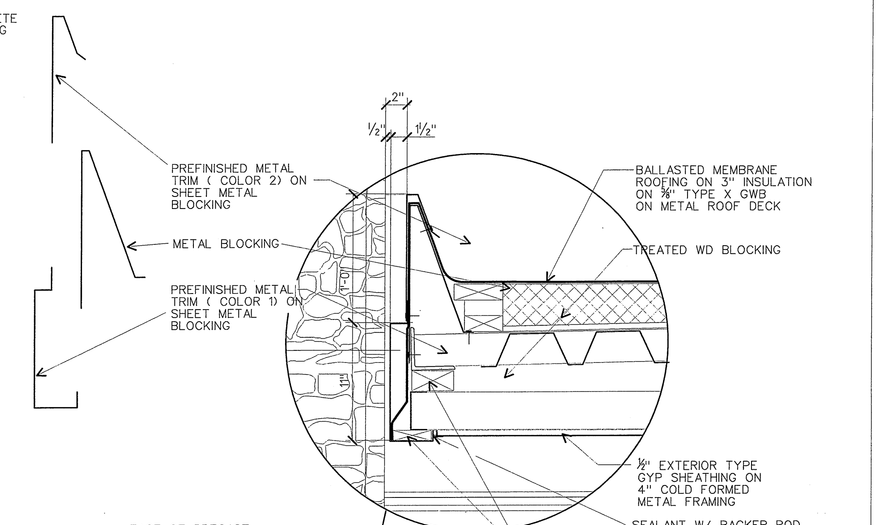

Enlarged Detail 4L
1½"=1'-0"

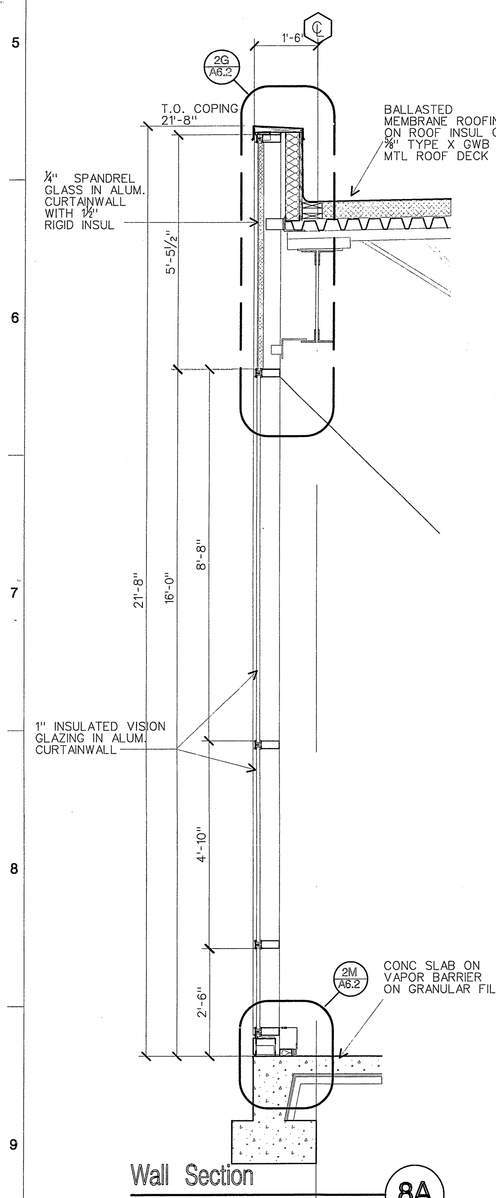

Wall Section 8A
½"=1'-0"

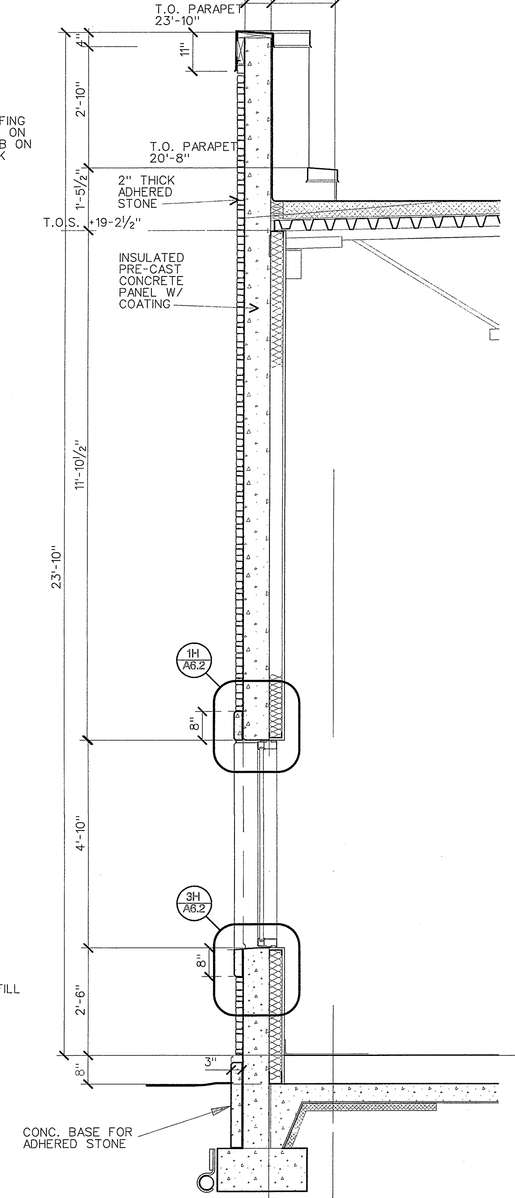

Wall Section 8D
½"=1'-0"

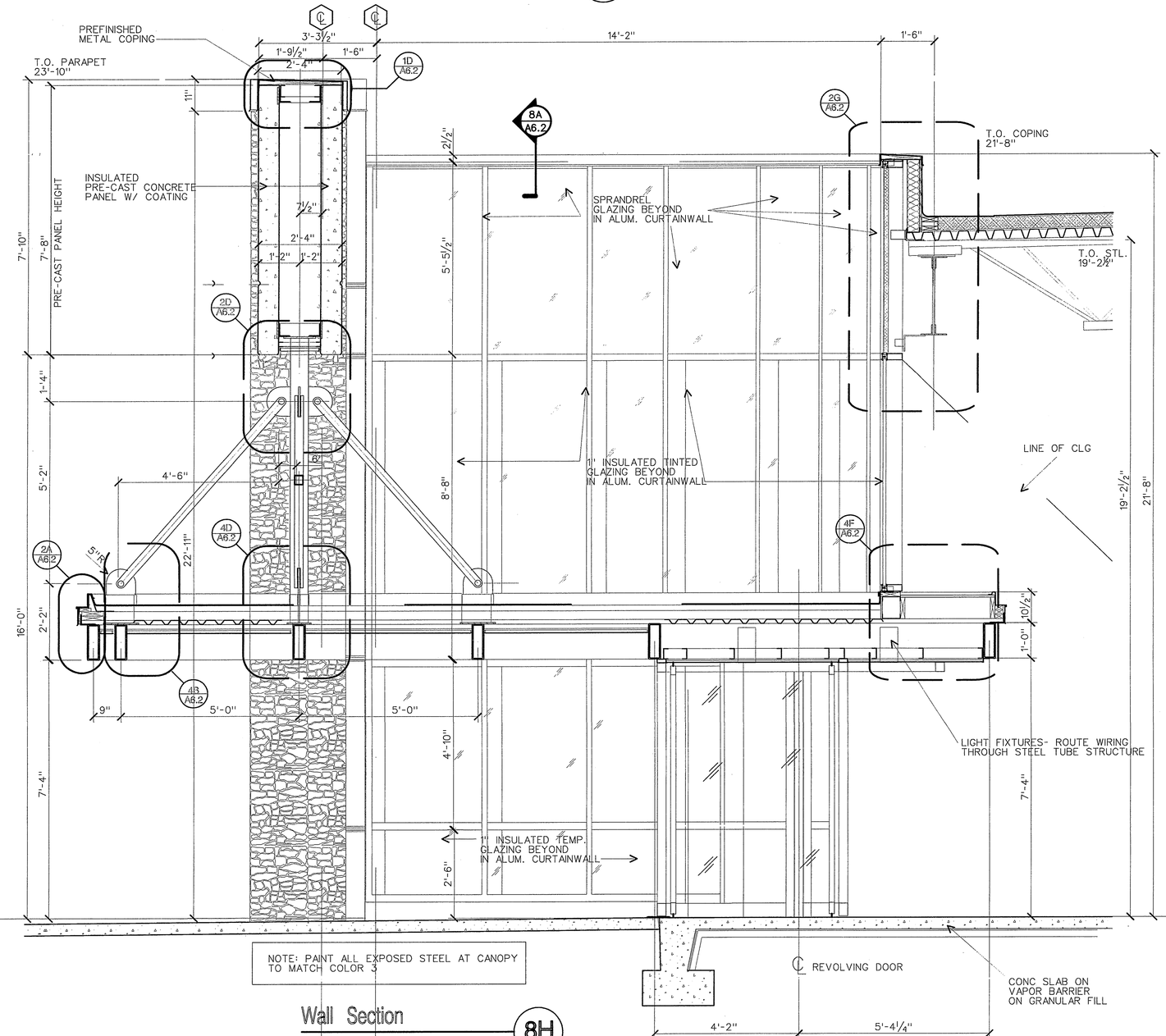

Wall Section 8H
½"=1'-0"

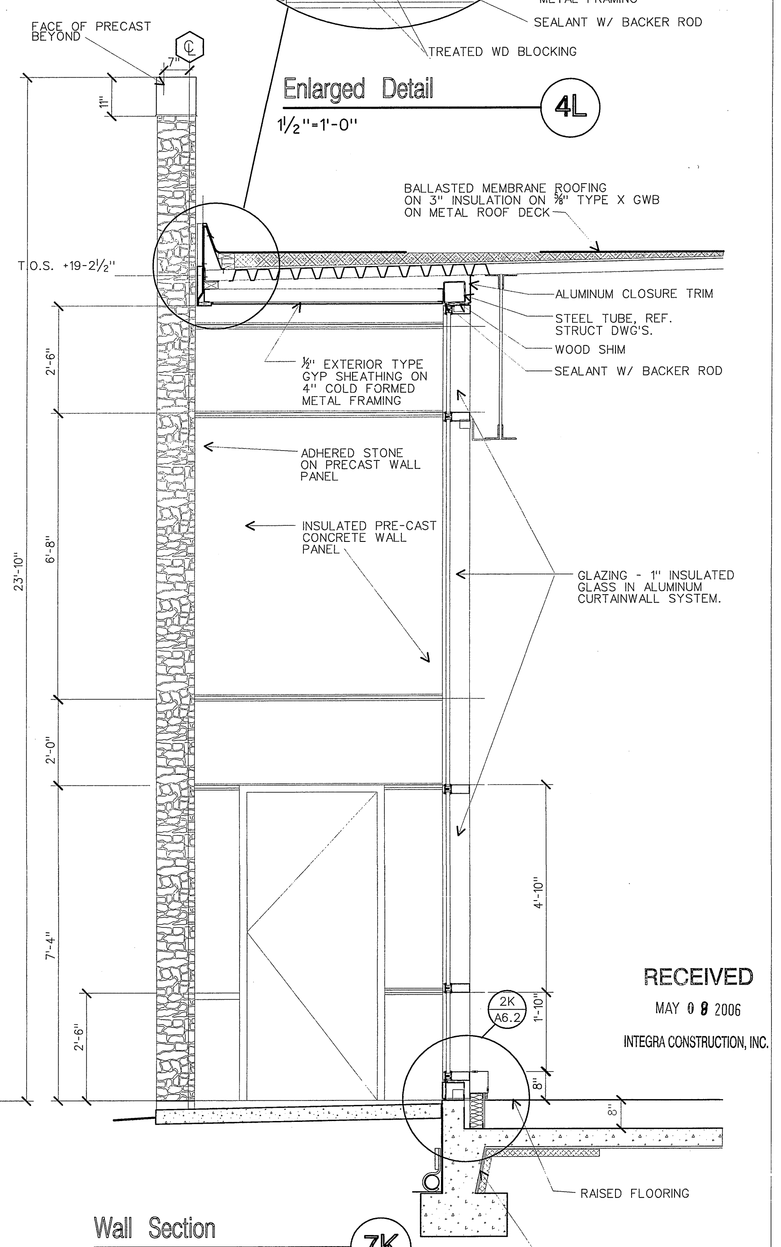

Wall Section 7K
½"=1'-0"

RECEIVED
MAY 09 2006
INTEGRA CONSTRUCTION, INC.

S&W

100 PEACHTREE STREET NW, SUITE 2500
ATLANTA, GA 30303
P 404.522.8888
F 404.521.6204
WWW.SW-SN.COM

idea|span
linking knowledge and design
A STEVENS & WILKINSON COMPANY

100 PEACHTREE STREET NW, SUITE 2400
ATLANTA, GA 30303
P 404.522.8899
F 404.521.6343
www.idea-span.com

■ SUBMITTALS

DATE	DESCRIPTION
04.04.06	INFORMAL RELEASE ON PRECAST
04.28.06	RELEASE ON PRECAST
05.05.06	PRICING / PERMIT SET

■ REVISIONS

DATE	DESCRIPTION

□ APPROVED FOR CONSTRUCTION
□ NOT APPROVED FOR CONSTRUCTION

THIS DRAWING IS THE PROPERTY OF STEVENS & WILKINSON STAAS & NEWDOW, INC. UNAUTHORIZED USE OF ANY KIND, INCLUDING USE ON OTHER PROJECT IS PROHIBITED.
© STEVENS & WILKINSON STAAS & NEWDOW, INC.

■ PROJECT NUMBER: 05041.00
■ DATE: 05.05.06
■ FILE: P:/PROJECTS/05041.00/DESIGN

cingular WIRELESS
PUEBLO, COLORADO

SECTIONS

A6.2

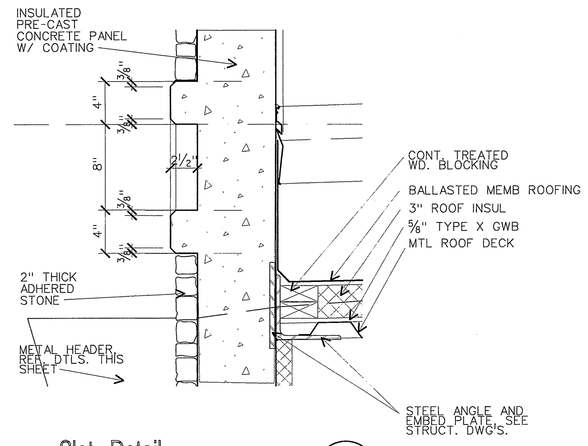

Slot Detail 2B
1½"=1'-0"

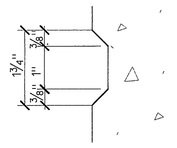

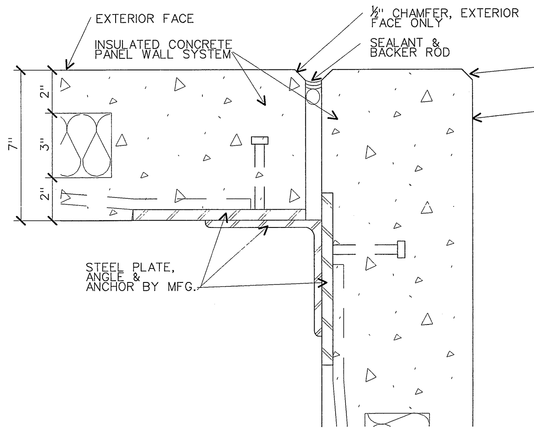

Detail @ Reveal Joint 2D
HALF SCALE

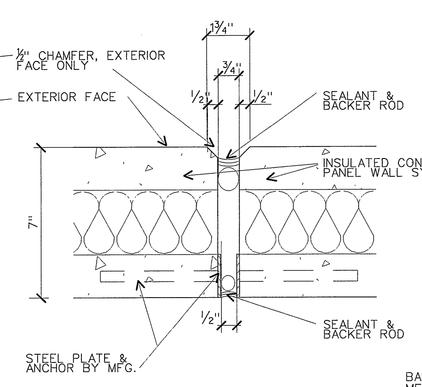

Detail @ Panel Joint 2F
3"=1'-0"

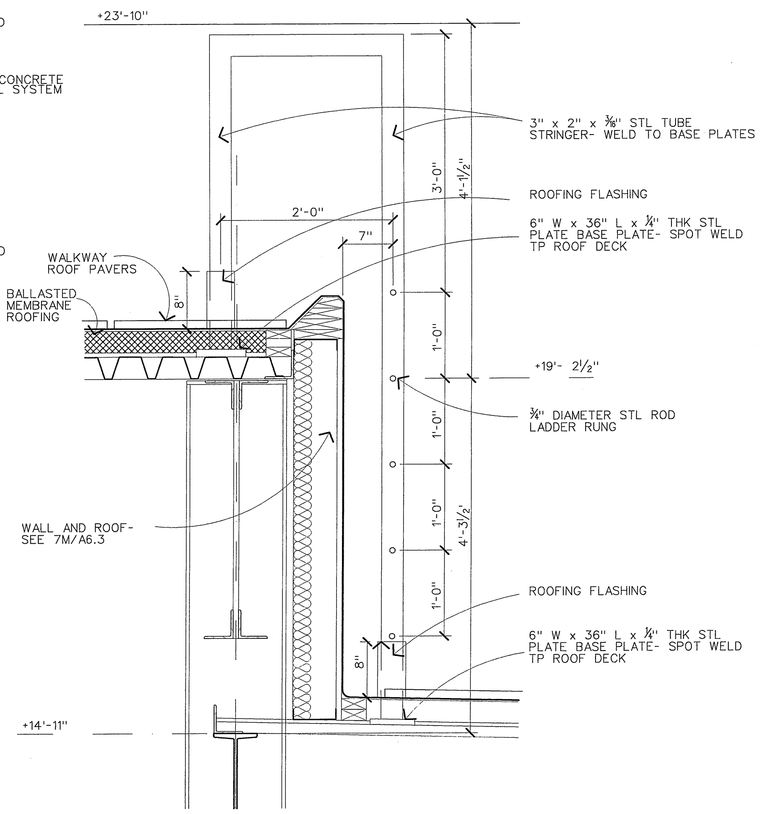

Ladder Detail 3M
1"=1'-0"

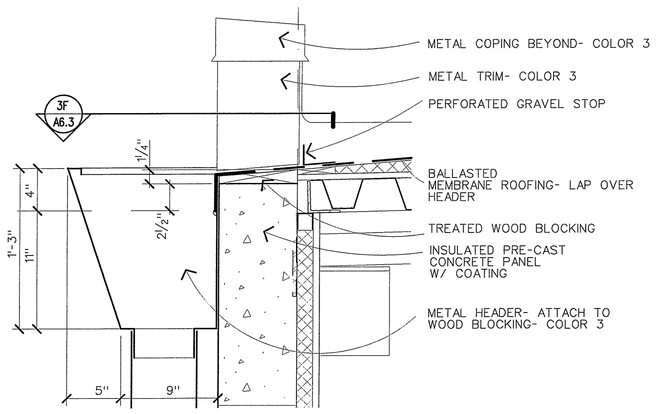

Mid Roof Header Detail 3C
1½"=1'-0"

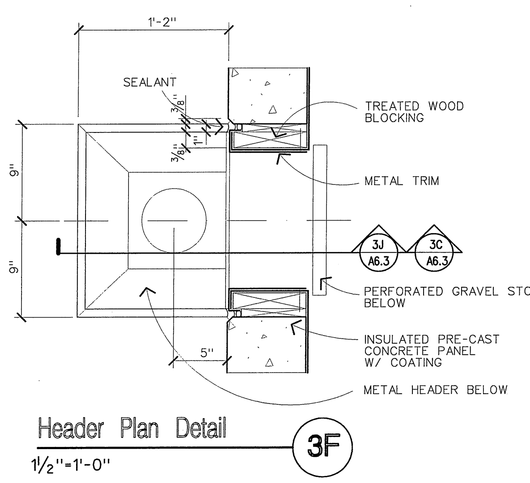

Header Plan Detail 3F
1½"=1'-0"

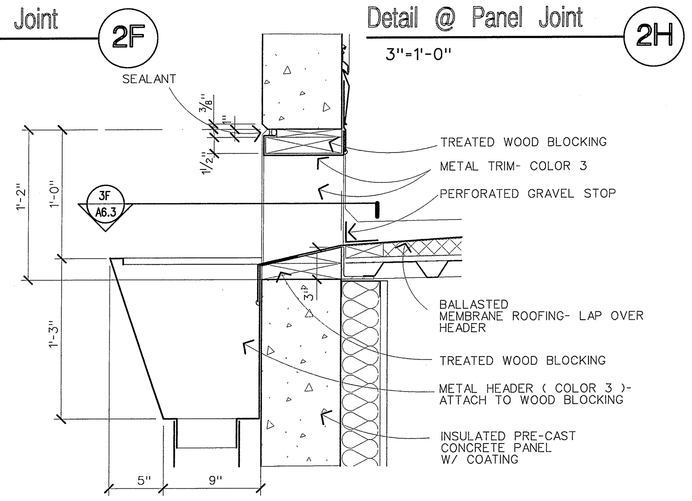

Low Roof Header Detail 3J
1½"=1'-0"

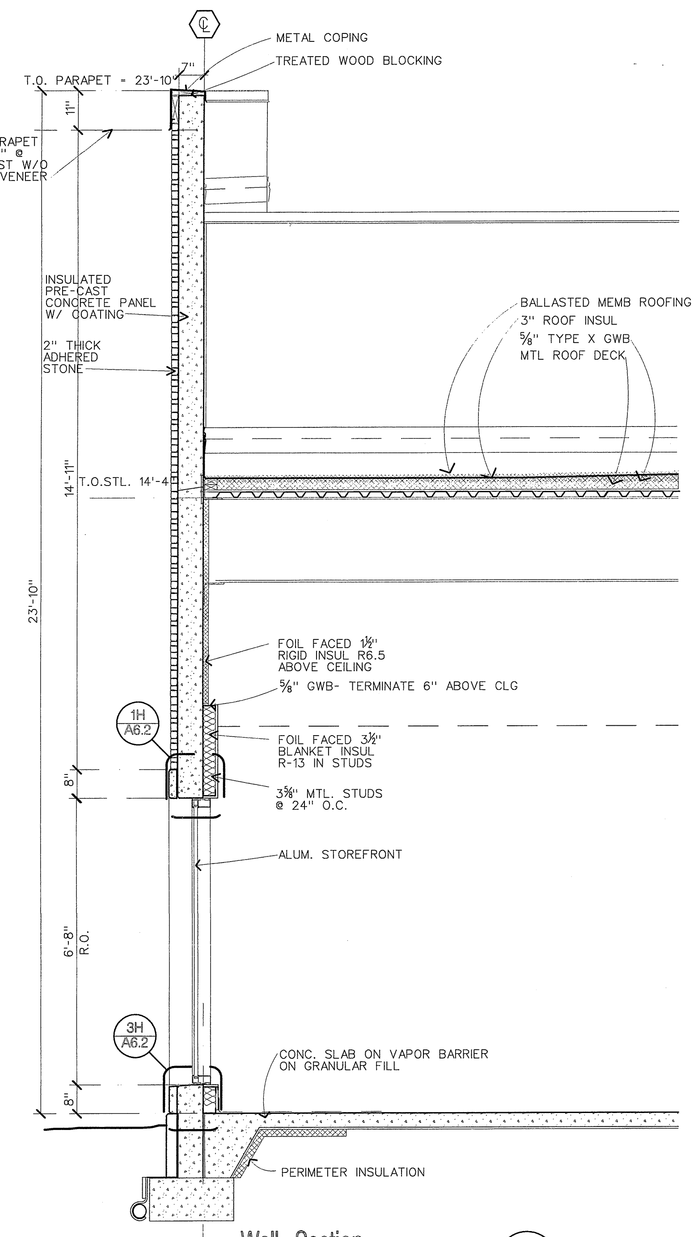

Wall Section 7B
1½"=1'-0"

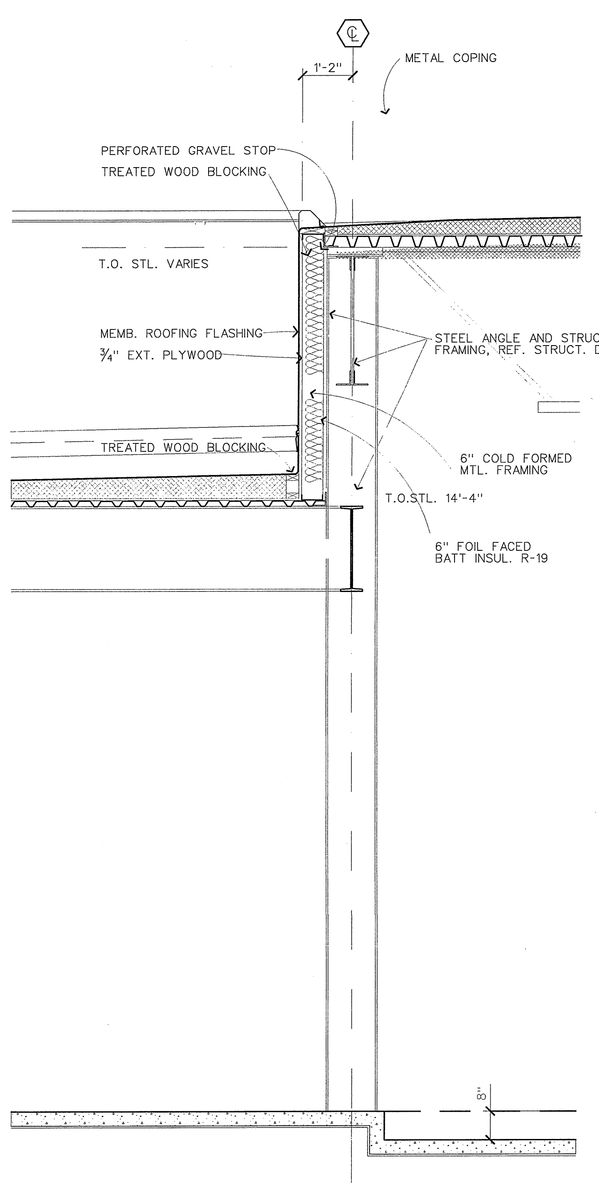

Wall Section 7E
½"=1'-0"

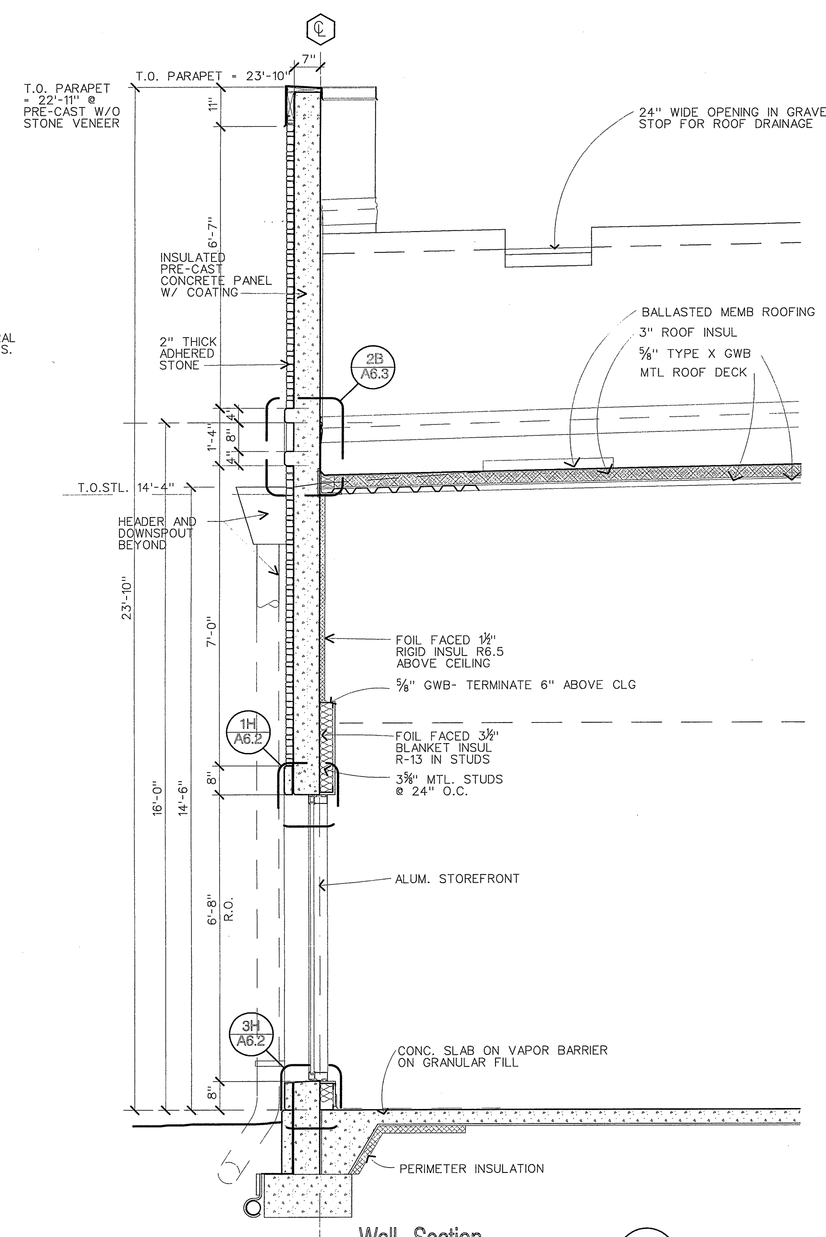

Wall Section 7K
½"=1'-0"

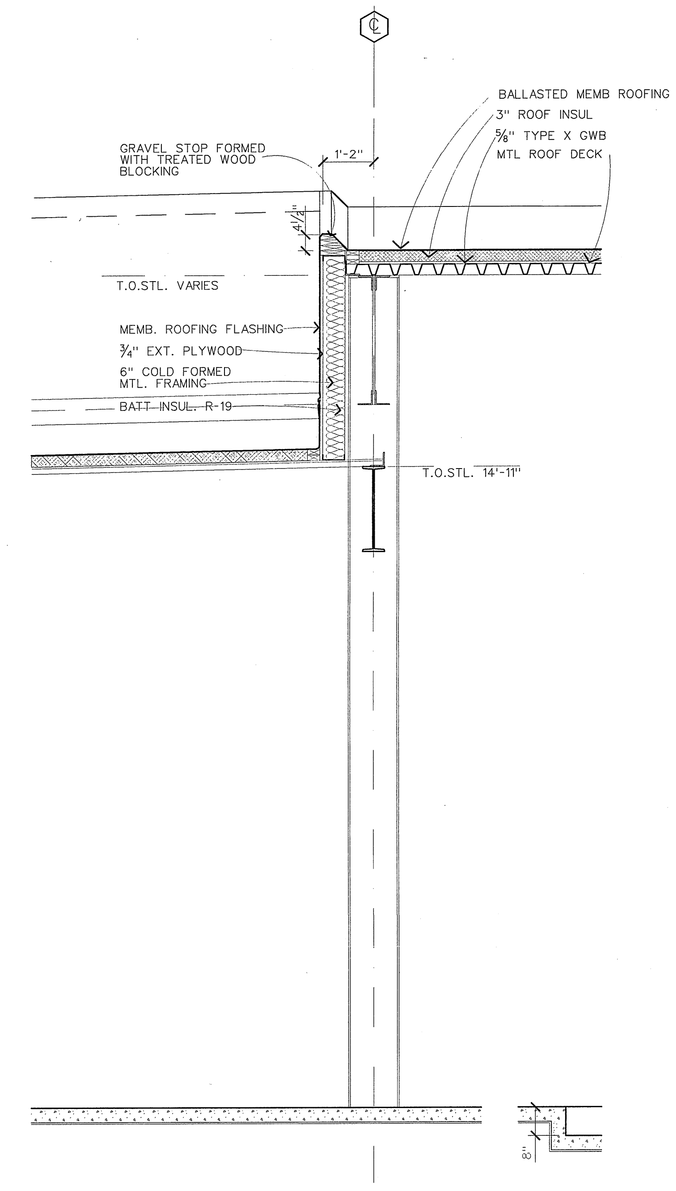

Wall Section 7M
½"=1'-0"

RECEIVED
MAY 0 8 2006
INTEGRA CONSTRUCTION, INC.

S&W

100 PEACHTREE STREET NW, SUITE 2500
ATLANTA, GA 30303
P 404.522.8888
F 404.521.6204
WWW.SW-SN.COM

idea|span
linking knowledge and design
A STEVENS & WILKINSON COMPANY

100 PEACHTREE STREET NW, SUITE 2400
ATLANTA, GA 30303
P 404.522.8899
F 404.521.6343
www.idea-span.com

■ SUBMITTALS

DATE	DESCRIPTION
04.24.06	INFORMAL RELEASE ON PRECAST
04.28.06	RELEASE ON PRECAST
05.05.06	PRICING / PERMIT SET

■ REVISIONS

DATE	DESCRIPTION

□ APPROVED FOR CONSTRUCTION
□ NOT APPROVED FOR CONSTRUCTION

THIS DRAWING IS THE PROPERTY OF STEVENS & WILKINSON STANG & HENDOW, INC. UNAUTHORIZED USE OF ANY KIND, INCLUDING USE ON OTHER PROJECT IS PROHIBITED.
© STEVENS & WILKINSON STANG & HENDOW, INC.

■ PROJECT NUMBER: 06041.00
■ DATE: 05.08.06
■ FILE: P:/PROJECTS/06041.00/DESIGN

cingular WIRELESS
PUEBLO, COLORADO

SECTIONS

A6.3

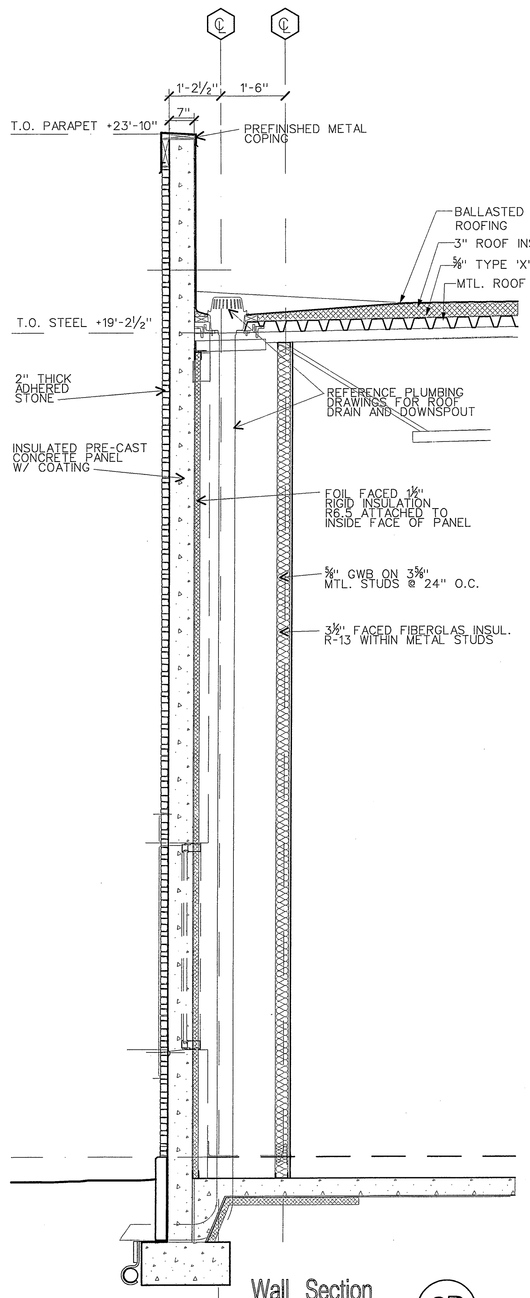

Wall Section 3B
½"=1'-0"

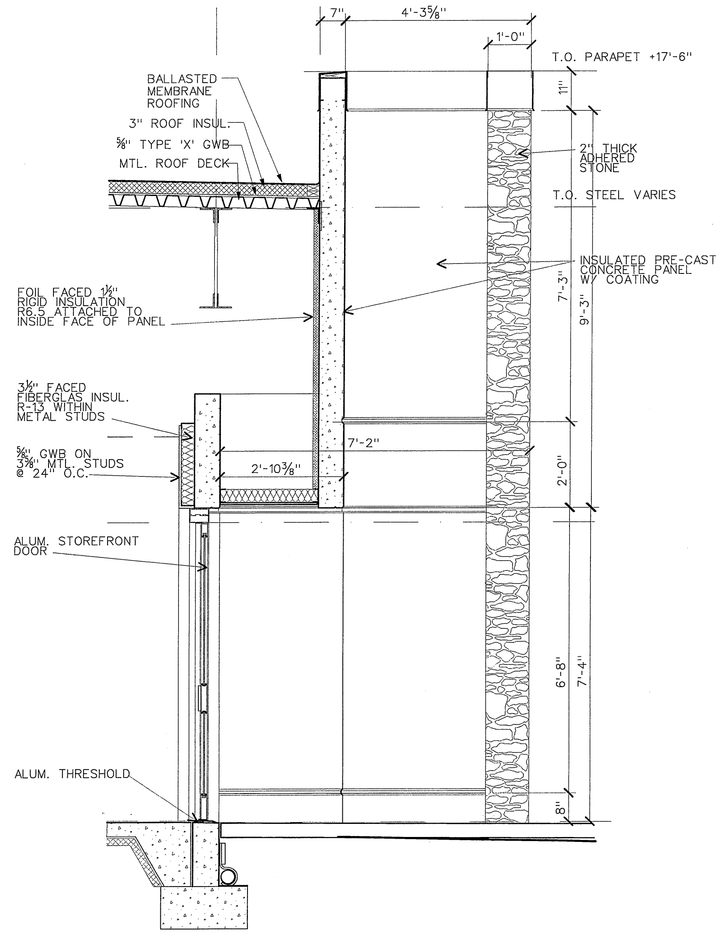

Wall Section 3D
½"=1'-0"

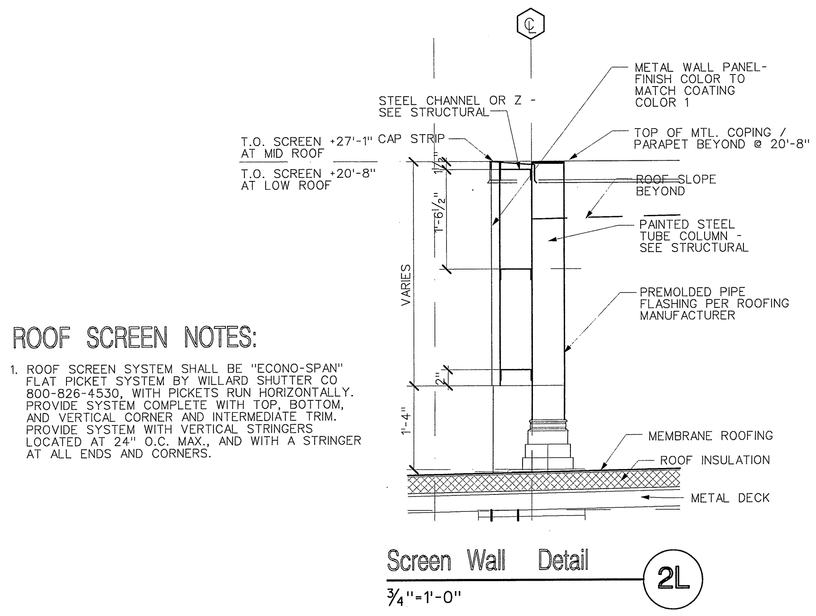

ROOF SCREEN NOTES:

1. ROOF SCREEN SYSTEM SHALL BE "ECONO-SPAN" FLAT PICKET SYSTEM BY WILLARD SHUTTER CO 800-826-4530, WITH PICKETS RUN HORIZONTALLY. PROVIDE SYSTEM COMPLETE WITH TOP, BOTTOM, AND VERTICAL CORNER AND INTERMEDIATE TRIM. PROVIDE SYSTEM WITH VERTICAL STRINGERS LOCATED AT 24" O.C. MAX., AND WITH A STRINGER AT ALL ENDS AND CORNERS.

Screen Wall Detail 2L
¾"=1'-0"

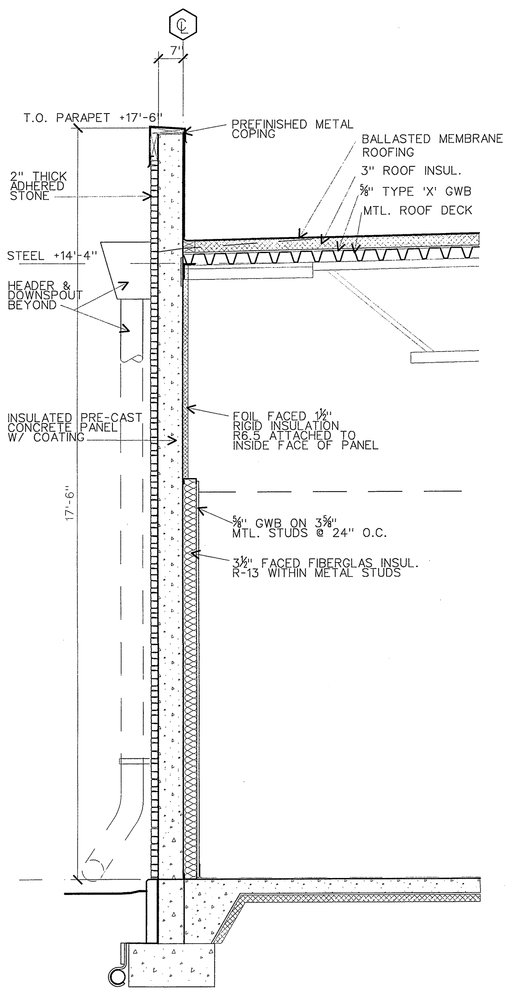

Wall Section 7B
½"=1'-0"

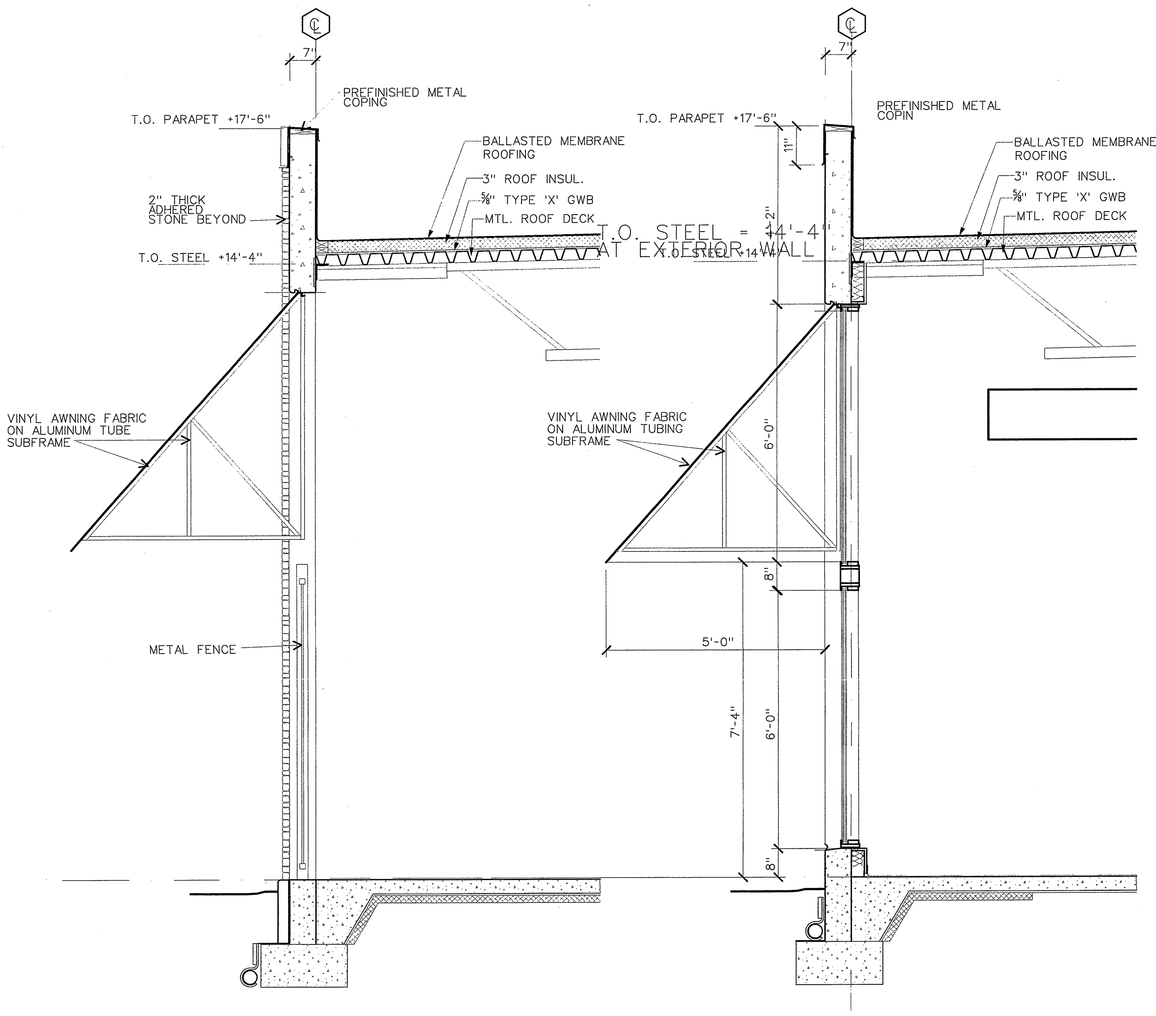

Wall Section 7D
½"=1'-0"

Wall Section 7F
½"=1'-0"

Wall Section 7H
½"=1'-0"

Wall Section 7L
½"=1'-0"

RECEIVED
MAY 09 2006
INTEGRA CONSTRUCTION, INC.

S&W

100 PEACHTREE STREET NW, SUITE 2500
ATLANTA, GA 30303
P 404.522.8888
F 404.521.6204
WWW.SW-SN.COM

idea|span
linking knowledge and design
A STEVENS & WILKINSON COMPANY

100 PEACHTREE STREET NW, SUITE 2400
ATLANTA, GA 30303
P 404.522.8899
F 404.521.6343
www.idea-span.com

■ SUBMITTALS

DATE	DESCRIPTION
04.04.06	INFORMAL RELEASE ON PRECAST
04.26.06	RELEASE ON PRECAST
05.09.06	PRICING / PERMIT SET

■ REVISIONS

DATE	DESCRIPTION

□ APPROVED FOR CONSTRUCTION
□ NOT APPROVED FOR CONSTRUCTION

THIS DRAWING IS THE PROPERTY OF STEVENS & WILKINSON STEANG & HEWDOWS, INC. UNAUTHORIZED USE OF ANY KIND, INCLUDING USE ON OTHER PROJECT IS PROHIBITED.

© STEVENS & WILKINSON STEANG & HEWDOWS, INC.

■ PROJECT NUMBER: 06041.00
■ DATE: 05.09.06
■ FILE: P:/PROJECTS/06041.00/DESIGN

cingular WIRELESS
PUEBLO, COLORADO

SECTIONS

A6.4

DOOR AND FRAME SCHEDULE

DOOR No.	DOOR SIZE WIDTH	DOOR SIZE HEIGHT	DOOR SIZE THK	DOOR MATERIAL	DOOR FINISH	DOOR TYPE	FRAME DETAILS– SEE A8.1 U.N.O. HEAD	FRAME JAMB	FRAME SILL	FRAME MATERIAL	FRAME FINISH	FRAME TYPE	FIRE RATING	HARDWARE	REMARKS
A01	8'-2"	7'-3"	-	-	-	-	-	-	-	-	-	-	--	-	--
A02	4'-0"	7'-2"	-	-	-	-	-	-	-	-	-	-	--	-	--
A03	3'-0"	7'-4"	2"	-	-	-	-	-	-	-	-	-	--	-	--
A04	3'-0"	7'-4"	2"	-	-	-	-	-	-	-	-	-	--	-	--
A05	3'-0"	7'-4"	2"	-	-	-	-	-	-	-	-	-	--	-	--
A06	8'-0"	9'-4"	-	-	-	-	-	-	-	-	-	-	--	-	--
A07	6'-4"	7'-0"	2"	-	-	-	-	-	-	-	-	-	--	-	--
A08	3'-0"	7'-4"	2"	-	-	-	-	-	-	-	-	-	--	-	--
A09	3'-0"	7'-4"	2"	-	-	-	-	-	-	-	-	-	--	-	--
A10	3'-0"	7'-4"	2"	-	-	-	-	-	-	-	-	-	--	-	--

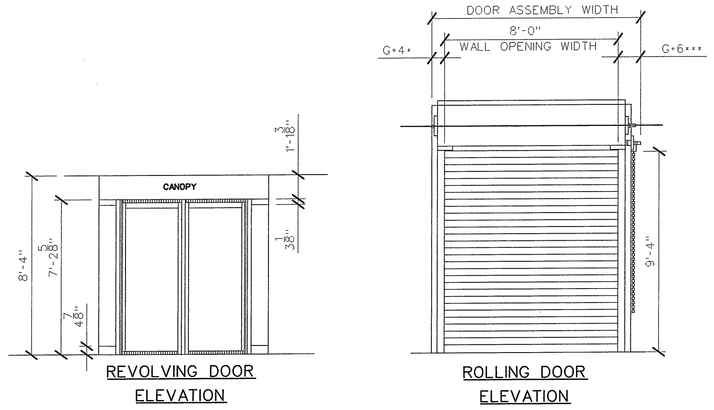

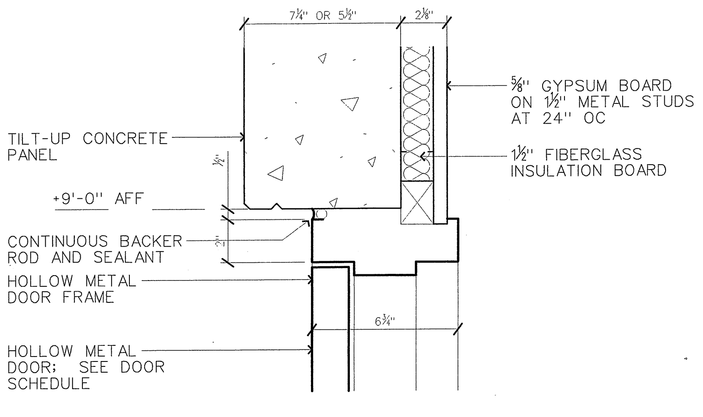

HEAD DETAIL (H1)
3" = 1'-0"

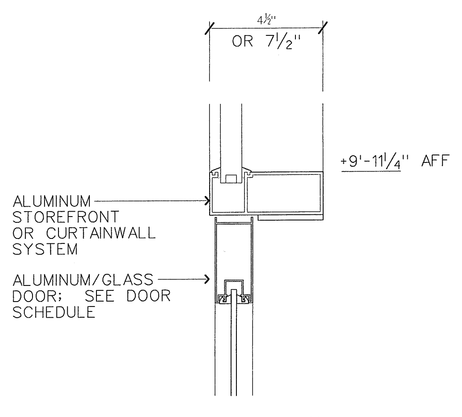

HEAD DETAIL (H2)
3" = 1'-0"

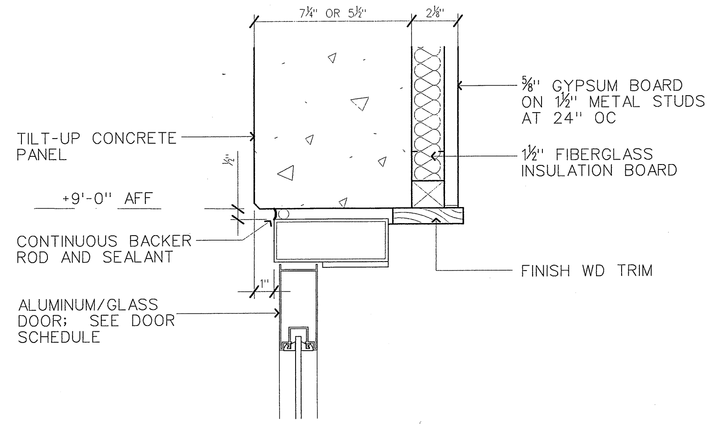

HEAD DETAIL (H3)
3" = 1'-0"

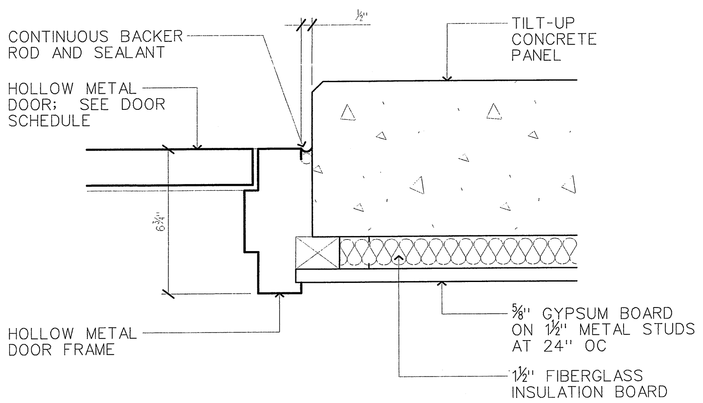

JAMB DETAIL (J1)
3" = 1'-0"

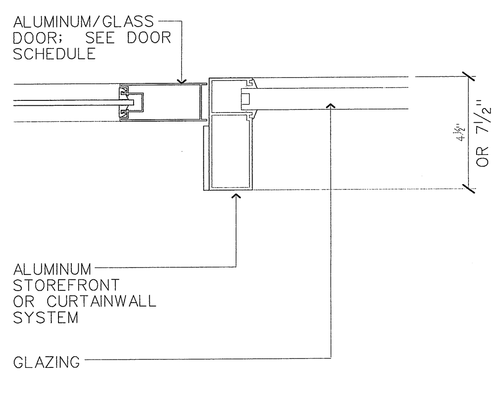

JAMB DETAIL (J2)
3" = 1'-0"

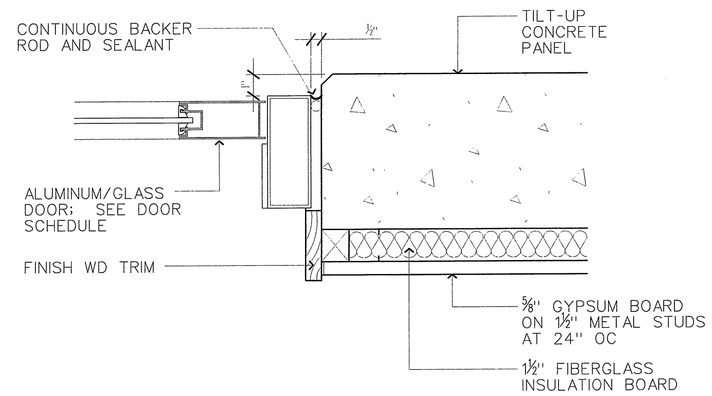

JAMB DETAIL (J3)
3" = 1'-0"

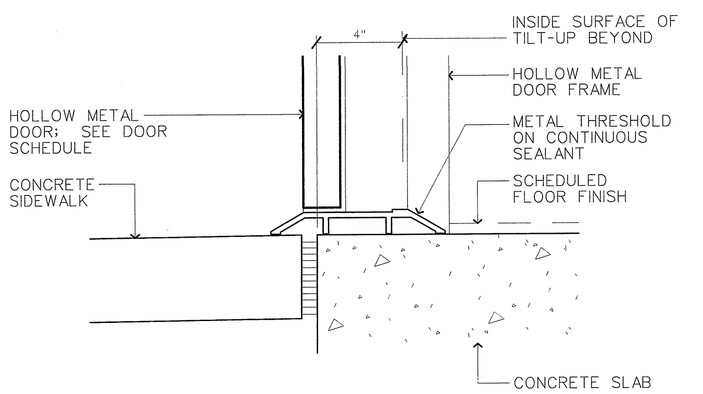

SILL DETAIL (S1)
3" = 1'-0"

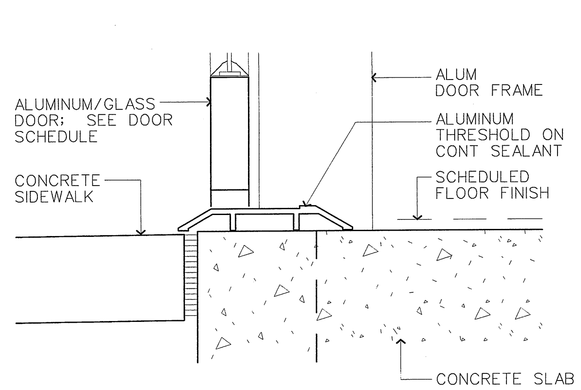

SILL DETAIL (S2)
3" = 1'-0"

MOUNTING HEIGHTS

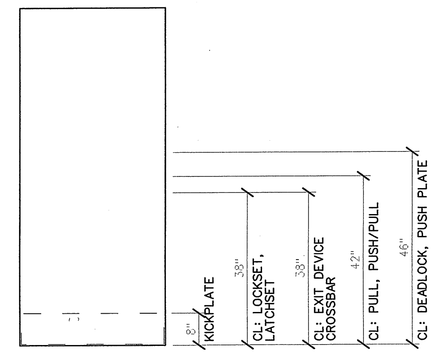

GENERAL NOTES

1. SEE INTERIOR DOCUMENTS FOR INTERIOR DOOR INFORMATION
2. ALL CARD READER CONTROLLED DOORS AND/OR MAGNETIC LOCKS SHALL BE CONNECTED TO THE BUILDING ALARMSYSTEM, AND SHALL AUTOMATICALLY UNLOCK IN EMERGENCY CONDITIONS. INTERCONNECT POWER DOOR OPERATORS AND CARD READERS SO THAT POWER OPERATORS ONLY BECOME ACTIVE AFTER THE DOOR IS UNLOCKED BY THE CARD ACCESS SYSTEM.
3. ABBREVIATIONS:

AL	ALUMINUM	HM	HOLLOW METAL
ANOD	CLEAR ANODIZED	PT	PAINTED
GL	GLASS		

4. PROVIDE ELECTRIC LATCH RETRACT PANIC HARDWARE, VON DUPRIN EL35A-EO, COMPLETE WITH REQUIRED ACCESSORIES FOR FULL OPERATION. ACCESSORIES TO INCLUDE POWER TRANSFER, POWER SUPPLY, AND WIRING. CONCEAL ALL WIRING IN DOOR JAMB AND FRAME. INTERCONNECT TO CARD READER SYSTEM SO THAT LATCH RETRACTS WHEN ACTIVATED BY CARD READER. DOOR SHALL BE ALWAYS OPERABLE FROM INTERIOR BY USE OF PUSH BAR.
5. PROVIDE POWER DOOR OPERATOR COMPLETE WITH ALL REQUIRED POWER SUPPLIES, ACCESSOROIES, ETC. AS REQUIRED FOR A FULLY FUNCTIONAL CONDITION. CONCEAL ALL WIRING INSIDE STOREFRONT FRAMING.

DOOR AND FRAME TYPES

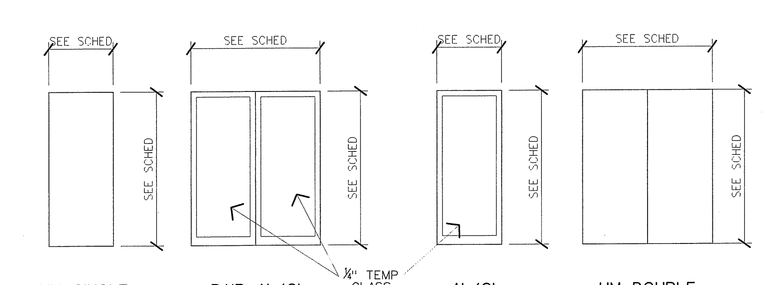

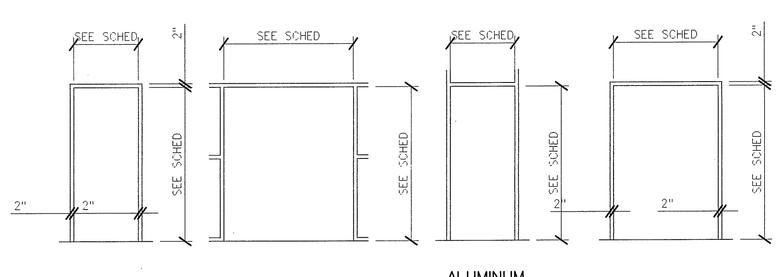

RECEIVED
MAY 08 2006
INTEGRA CONSTRUCTION, INC.

S&W

100 PEACHTREE STREET NW, SUITE 2500
ATLANTA, GA 30303
P 404.522.8888
F 404.521.6204
WWW.SW-SN.COM

idea|span
linking knowledge and design
A STEVENS & WILKINSON COMPANY

100 PEACHTREE STREET NW, SUITE 2400
ATLANTA, GA 30303
P 404.522.8899
F 404.521.6343
www.idea-span.com

■ SUBMITTALS

DATE	DESCRIPTION
04.24.06	INFORMAL RELEASE ON PRECAST
04.28.06	RELEASE ON PRECAST
05.08.06	PRICING PACKAGE

■ REVISIONS

DATE	DESCRIPTION

□ APPROVED FOR CONSTRUCTION
□ NOT APPROVED FOR CONSTRUCTION

THIS DRAWING IS THE PROPERTY OF STEVENS & WILKINSON STAINS & NEWDOW, INC. UNAUTHORIZED USE OF ANY KIND, INCLUDING USE ON OTHER PROJECT IS PROHIBITED.
© STEVENS & WILKINSON STAINS & NEWDOW, INC.

■ PROJECT NUMBER: 06041.00
■ DATE: 05.08.06
■ FILE: P:/PROJECTS/06041.00/DESIGN

cingular WIRELESS
PUEBLO, COLORADO

Door Schedule Elevations and Details

A8.1

DESIGN CRITERIA:

1.1 Governing Building Code: IBC 2003

1.2 Gravity Loads:

Dead Load:	6 psf + self weight of framing
Ballast Flat Roof:	10 psf main, 13 psf corners
Collateral Dead Load:	6 psf
Roof Live Load:	20 psf (reducible)
Ground Snow Load:	30 psf
Roof Snow Load:	21 psf

1.3 Earthquake:

Seismic Use Group:	I
Seismic Site Class:	D
Seismic Importance Factor:	1.0
Ss:	0.017
S1	0.006
Response Modification:	4
Deflection Amplification:	4
Seismic Perform. Category:	A
Structural System:	Bearing wall with concrete shear walls
Analysis Procedure:	Simplified Analysis Procedure

1.4 Wind:

Wind Speed:	90 MPH
Exposure:	C
Importance:	1
Basic Velocity Pressure:	16.9 psf

1.5 Code required special inspections shall be performed under direct contract to the owner. Per chapter 17 of IBC as follows:
A) Concrete (IBC 1704.4) Exceptions per this section exempt foundations and slab-on-grade from special inspections.
B) Embedded Anchor Bolts (IBC Table 1704.4)
C) Reinforcing Steel (IBC Table 1704.4): This applies to all cast-in-place walls and site-cast, tilt-up panels.
D) Welding (IBC 1704.3.1): This applies to all field welding shown on these drawings with the exception that
1. This does not apply to bridging welds.
2. Periodic visual inspection is allowed for deck welds, single pass fillet welds, cold formed steel welds, and handrail/stair welding.
3. Welding of rebar is not permitted unless done in an approved shop.
E) High Strength Bolting (IBC 1704.3.3) Periodic inspection of all high strength bolting is permitted. Tension Indication Bolts or equivalent are to be used.

SOIL/FOUNDATION CONDITIONS:

2.1 Owner to retain qualified soils engineer to monitor foundation and sub-grade during site preparation and foundation construction. Each footing excavation shall be inspected to insure that satisfactory soil exists below the base of the footing. All excavation, foundation construction, and subgrade preparation must be in strict compliance with a geotechnical report titled "Geotechnical Engineering Report" by Terracon dated March 28, 2006.

2.2 Structural design is based upon a net allowable soil bearing pressure of 2500 psf for square and rectangular footings, and 2500 psf for strip footings.

2.3 All footing excavations shall be free from loose or soft soils, water, ice and other unsuitable materials before foundation placement can continue.

2.4 The floor slab shall be supported on a 4 inch layer of clean granular material such as gravel or crushed stone.

2.5 Frost depth is 30 inches below grade. All exterior footings shall be formed 30 inches (min.) below finished grade for frost protection

CONCRETE:

3.1 The extent of the concrete work is shown on the drawings.

3.2 Submittals are required for reinforcement, concrete mixes, admixtures, curing compounds and any other item as requested by the owner or Architect/Engineer.

3.3 Concrete testing shall be performed per ACI requirements:
A) A minimum of one sample a day.
B) No less than 5 strength tests for a given class of concrete.
C) A minimum of one sample per 150 cubic yards.
D) A minimum of one sample for each 5,000 square feet of slab or wall.
E) If less than 50 cubic yards of a given class of concrete is needed, the need for strength tests may be waived with the approval of the building official.

3.4 Materials shall comply with ACI 318-02. Portland cement shall be per ASTM C150, Type 1 with normal weight aggregate per ASTM C33. A 5% (±1.5) air entraining agent shall be used in all dock walls, dock slab and other exterior concrete. This agent shall be per ASTM C260.

3.5 Compressive strength of concrete (28 day strength) as follows:

Footings:	3,000 psi
Exterior Slab:	4,000 psi
Slab-On-Grade:	4,000 psi
Precast Panels:	5,000 psi
Exterior Walls:	4,000 psi

3.6 Proportion all mix designs to have a maximum slump of 4 inches unless specifically approved by the Engineer.

3.7 The maximum water/cement ratio shall be limited to the following unless specifically approved by the Engineer.

Footings:	0.50
Exterior Slab:	0.45
Slab-On-Grade:	0.45
Tilt-up Panels:	0.45
Exterior Walls:	0.48

3.8 Reinforcement steel: Grade 60 Fy = 60,000 psi min. (ASTM A615)

3.9 Anchor bolts shall be F1554-36 material and shall have a minimum embedment of 12 inches into the concrete unless called for otherwise on the drawings. All threads shall be cut and not rolled. The embedded end shall consist of a heavy hex nut or other mechanical anchor. Hooked bolts are not acceptable. All anchor bolts must be cleaned of oil, rust and other deleterious coatings prior to placement. Set all embedments by means of a template where possible.

3.10 Detailing: All reinforcing shall be detailed, bolstered and supported per ACI #315, "Manual of Standard Practice for Detailing Reinforcing Concrete Structures." No lap splices shall be used in vertical pier steel.

3.11 Curing and sealing compound shall be "Spartan-cote" by The Burke Group, or an equivalent approved by the owner and Architect/Engineer.

3.12 Lap splices shall be in accordance with the following table, unless noted otherwise. Where classes are not called out on the drawings, use Class "B" splices.

	Top Bars			Other Bars			Compression
Bar	ld	"A"	"B"	ld	"A"	"B"	Splice
3	22"	22"	28"	17"	17"	23"	12"
4	29"	29"	37"	22"	22"	29"	15"
5	36"	36"	47"	28"	28"	37"	19"
6	43"	43"	56"	33"	33"	43"	23"
7	63"	63"	81"	48"	48"	63"	27"
8	72"	72"	93"	55"	55"	72"	30"
9	80"	80"	104"	62"	62"	80"	34"
10	89"	89"	116"	69"	69"	89"	38"
11	98"	98"	128"	76"	76"	98"	42"

ACI 12.15.1: Tension Lap Lengths
Class "A" Length=1.0ld
Class "B" Length=1.3ld
fy=60,000psi
fy=3,000psi

B) Compression Splices*

ACI 12.16.1: length=0.0005fydb
*Top" bars are horizontal bars so placed that more than 12" of fresh concrete is cast in the member below.
Lap welded wire fabric one spacing of cross wires plus 2 inches.

EXECUTION:

3.13 The concrete foundations and slab-on-grade must be placed on sound limestone or engineered fill, respectively.

3.14 Placement of concrete shall be per ACI 318-02. Concrete shall be deposited as near to its final position as possible. All concrete shall be thoroughly consolidated around reinforcement and embedded items. All reinforcing steel must be free from dirt, rust and other deleterious material prior to placement.

3.15 Minimum concrete covers as follows:

Cast against and permanently exposed to earth:	3"
Concrete permanently exposed to earth or weather: No. 5 bar or smaller:	1-1/2"
Concrete permanently exposed to earth or weather: No. 6 bar or larger:	2"
Concrete not exposed to weather or in contact with ground (to No. 11 bars):	3/4"

3.16 Provide continuous nominal 2" X 4" key-way in all horizontal and vertical construction joints.

3.17 No admixtures shall be used without the approval of the engineer. No calcium chloride shall be used.

3.18 Provide curing and sealing compound to all exposed interior slabs and to all exterior slabs, walks and curbs as soon as final finishing is complete.

3.19 Concrete placed in cold weather shall be in compliance with ACI 306. Do not place concrete on frozen sub-grade or on grades containing frozen materials.

3.20 Concrete placed in hot weather shall be in compliance with ACI 305.

STRUCTURAL STEEL:

4.1 The extent of the structural steel and metal fabrication is as shown on the drawings.

4.2 For steel and metal items not specifically detailed on the drawings, the fabricator shall design and supply appropriate products.

4.3 All metal items must be submitted for review prior to fabrication. Shop drawings must show all material sizes, welds (use standard AWS symbols), details and erection information.

4.4 All design shall be per the second edition of the AISC "LRFD Manual of Steel Construction." All beam connections shall be AISC "Type 2, simple framing", connections, unless detailed otherwise on the drawings Simple framing connections shall be in accordance with the typical details shown on the drawings. When beam and reactions are not shown on the plans, beam connections shall be designed for 50% of the total load capacity for the beam span. All wind brace connections shall be designed for the full tensile capacity of the brace member.

4.5 All welding shall conform to AWS D1.1. All shop and field welding shall be performed by AWS certified welders. All field welds shall be fillet welds designed at 50% of allowable stress so that continuous special inspection is not needed.

4.6 All cold-formed steel shall conform to the 1996 edition of the AISI "Specification for the Design of Cold-Formed Steel Structural Members."

PRODUCTS:

4.7 All wide flange steel shapes shall be: ASTM A572 Gr. 50 or A992 All angles, channels, plates, bars & misc. Steel shapes shall be: A36 minimum. All HSS steel shapes shall be ASTM A500 Grade B.

4.8 All bolted connections may use A325N bolts or A307 bolts as indicated on the drawings. All high strength bolts shall be designed as bearing N type threads.

4.9 All steel items, except those embedded in concrete shall have a minimum of 1.5 mil rust inhibitive grey primer per the specifications.

EXECUTION:

4.10 Steel columns shall be set on the concrete pier, or footing, and be erected in a plumb condition per AISC tolerances.

4.11 The steel erector shall provide all temporary shoring as required to stabilize the building during construction.

4.12 All field welding shall be by certified AWS welders per AWS D1.1.

4.13 All field welding and gas cut areas shall be touched up with primer by the steel erector.

4.14 All steel shall be cleaned to be free from dirt, mud and corrosion after erection. The erector shall touch up paint as required.

JOIST & JOIST GIRDER CONSTRUCTION:

5.1 All bar joists and girders shall be designed and fabricated per the Steel joist institute "Standard Specifications for Steel Joists and Joist Girders" by a company regularly engaged in the manufacturing of joists. The joist supplier shall provide complete shop drawings showing the location and type of all joists, girders and other pertinent information. Provide calculations of all joists sealed by a professional engineer in the State of Colorado.

5.2 All skylights, fire protection, mechanical or electrical equipment such as pipes, light fixtures, etc. must be supported from the top or bottom chords at panel points only. If the load does not occur at a panel point, an extra vertical must be installed as shown on the drawings.

5.3 Bridging shall be installed as required per SJI and OSHA specifications.

5.4 Suspension of any mechanical or electrical equipment, such as ducts, piping, light fixtures, etc. from steel joist bridging will not be permitted without the prior approval of the Engineer.

5.5 No field cutting or alterations of steel joists or joist girders will be allowed without the written permission of the Engineer.

5.6 Joist manufacturer shall provide roof joists, joist girder, and bridging designed for a 8.3 psf gross wind uplift, min. 10 psf net wind uplift. Unless noted as higher on drawings.

5.7 Joist manufacturer shall design top chords of joists with unbraced lengths equal to roof openings.

PRE-CAST CONSTRUCTION

6.1 Precast Wall Panels shall be designed to comply with ACI 318 and the design recommendations of PCI MNL 120, "PCI Design Handbook-Precast and Prestressed Concrete". Panels shall be fabricated per PCI MNL 117. The precast supplier shall provide complete shop drawings and placement plans. Provide calculations of all panels sealed by a professional engineer in the state of Colorado.

EXECUTION:

6.2 Install clips, hangers, and other accessories required for connecting precast panels to supporting members and backup materials.

6.3 Provide temporary supports and bracing as required to maintain position, stability, and alignment as panels are being permanently connected.

LIGHT GAGE STEEL FRAMING

7.1 The extent of the cold-formed metal framing is as shown in the architectural, interior and structural drawings.

7.2 All studs, tracks, bridging and accessories shall be formed from steel having a galvanized coating meeting the requirements of ASTM A525, G60.

7.3 Light gage framing systems shall be installed in accordance with manufacturers printed instructions and recommendations, unless otherwise noted. Manufacturers will provide all necessary accessories.

7.4 All studs shall be plumbed, aligned and securely attached to top and bottom tracks by either welding or screw fastening at both inside and outside flanges, studs shall have full bearing against track web, prior to stud and track attachment. Splices in studs will not be permitted. Provide slip connections to structure where indicated.

7.5 Stud u-track gage shall match stud gage. Use deep flange track. All track butt joints and abutting pieces of track shall be butt welded or spliced together.

7.6 Wall stud bridging shall be attached in a manner to prevent stud rotatation. Bridging rows shall be spaced in accordance with manufacturers recommendations. Contractor shall note that without lateral support from bridging and/or sheathing each face the studs have reduced capacity and will not support the full design loads.

7.7 Screwing, power-actuated fasteners, welding or a combination of methods, shall accomplish fastening of the cold-formed metal framing system. The type, size and spacing of the fasteners shall be as required by the manufacturer or approved connection details. All connections shall be designed for the appropriated loads as provided in the "Design Criteria" section of these general notes. As a minimum, provide fastening patterns in accordance with the typical details depicted in these drawings.

7.8 Welding shall be done with E70 electrodes. Minimum size of welds shall equal thickness of thinner member being connected. All welders shall be AWS D1.1 & D1.3 certified welders. Welds shall be touched up with zinc rich paint.

7.9 Install supplementary framing, blocking and bracing in stud framing to support fixtures, services, heavy trim, shelving, furnishings, and similar works requiring attachment to framing. Comply with stud manufacturers written instructions and industry standards.

7.10 Install headers at all wall openings. Frame openings with a double stud at each jamb.

7.11 Interior non-load-bearing wall studs at 16 in o.c.:

Basic Size			
Size:	=3⅝C x 1⅝ Flg.	3⅝C x 1⅝ Flg.	3⅝C x 2 Flg.
Gage:	=20	18	14
Fy:	=33	33	33
Section Properties:			
Ix:	=0.577in.^4	0.710in.^4	1.265in.^4
Sx:	=0.307in.^3	0.392in.^3	0.698in.^3
A:	=0.264in.^2	0.340in.^2	0.595in.^2
Max height:	=10ft	15ft	20ft

7.12 Interior load-bearing wall studs at 16 in o.c.:
Max. load is from a 20 foot tributary width of ceiling with a weight of 15 psf total = 300plf

Basic Size		
Size:	=3⅝C x 1⅝ Flg.	3⅝C x 1⅝ Flg.
Gage:	=20	18
Fy:	=33	33
Section Properties:		
Ix:	=0.577in.^4	0.710in.^4
Sx:	=0.307in.^3	0.392in.^3
A:	=0.264in.^2	0.340in.^2
Max height:	=10ft	15ft

7.13 Ceiling joist @ 16" o.c. with maximum span of 20 feet and 15 psf load.

Basic Size	
Size:	=6C x 2 Flg.
Gage:	=18
Fy:	=33
Section Properties:	
Ix:	=2.683in.^4
Sx:	=0.894in.^3
A:	=0.492in.^2

ENGINEERING RESPONSIBILITY:

7.14 The sizes listed in notes 7.11 to 7.13 are minimum sizes expected on this project. The final gravity and lateral design of all interior light gage steel work shall be done by the contractor supplying this material. See extent of work on Ideaspan architectural interior document.

7.15 Lateral stability for interior spaces enclosed by steel stud work must be achieved without bracing top of stud walls to the structural steel. No visible braces are permitted above top of stud walls. It is suggested that walls be braced at the ceiling joist level by means of an X-brace roof diaphragm and collector system, or other means.

7.16 Calculations and shop drawings describing the engineering of notes 7.14 and 7.15 shall be submitted to architect / engineer for approval prior to construction.

STANDARD ABBREVIATIONS USED ON STRUCTURAL DRAWINGS

A.F.F.	: ABOVE FINISHED FLOOR	E.J.	: EXPANSION JOINT	K.	: KIP	S.B.	: SOIL BORING
ALT.	: ALTERNATE	ENG.	: ENGINEERED	K.W.	: KILOWATT	SCH.	: SCHEDULE
		ELEC.	: ELECTRICAL			S.F.	: SQUARE FEET
B.O.C.	: BOTTOM OF CURB	EL.	: ELEVATION	LAM.	: LAMINATED	SHT.	: SHEET
B.O.F.	: BOTTOM OF FOOTING	ELEV.	: ELEVATION	LAV.	: LAVATORY	SIM.	: SIMILAR
BLDG.	: BUILDING	EQ.	: EQUAL	LG.	: LONG	S.L.	: STEEL/STRUCTURAL LINE
BLKG.	: BLOCKING	E.W.	: EACH WAY	LLH	: LONG LEG HORIZONTAL	SPEC.	: SPECIFICATIONS
BOT.	: BOTTOM	EXP.	: EXPANSION	LLV	: LONG LEG VERTICAL	SLBB	: SHORT LEG BACK TO BACK
B.M.	: BENCH MARK	EXT.	: EXTERIOR	LLBB	: LONG LEG BACK TO BACK	STL.	: STEEL
		EXIST.	: EXISTING				
c=	: CAMBER			M.O.	: MASONRY OPENING	T.O.B.	: TOP OF BEAM
C.C.J.	: CRACK CONTROL JOINT	F.B.	: FLANGE BRACE			T.O.C.	: TOP OF CONCRETE
C.F.M.	: CUBIC FEET PER MINUTE	F.D.	: FLOOR DRAIN	NOM.	: NOMINAL	T.O.F.	: TOP OF FOOTING
C.J.	: CONSTRUCTION JOINT	FDN.	: FOUNDATION	N.S.	: NEAR SIDE	T.O.G.	: TOP OF GIRDER
C.L.	: CENTER LINE	F.F.	: FINISHED FLOOR	N.T.S.	: NOT TO SCALE	T.O.J.	: TOP OF JOIST
CLG.	: CEILING	FIN.	: FINISH			T.O.M.	: TOP OF MASONRY
C.M.P.	: CORRUGATED METAL PIPE	F.S.	: FAR SIDE	O.C.	: ON CENTER	T.O.P.	: TOP OF PIER
C.M.U.	: CONCRETE MASONRY UNIT	FTG.	: FOOTING			T.O.S.	: TOP OF STEEL
COL.	: COLUMN			PEMB	: PRE-ENGINEERED METAL BLDG.	TYP.	: TYPICAL
CONC.	: CONCRETE	G.B.	: GRADE BEAM	PL.	: PLATE		
CORR.	: CORRUGATED	GYP. BD.	: GYPSUM BOARD	PNT.	: PAINT	U.N.O.	: UNLESS NOTED OTHERWISE
CONST.	: CONSTRUCTION						
CONTR.	: CONTRACTOR	HT.	: HEIGHT	R.	: RADIUS	VERT.	: VERTICAL
C.Y.	: CUBIC YARD	HDW.	: HARDWARE	R.D.	: ROOF DRAIN		
		H.M.	: HOLLOW METAL	REINF.	: REINFORCING	WD.	: WOOD
DET.	: DETAIL			R.F.	: RIGID FRAME	W.P.	: WORKING POINT
DIM.	: DIMENSION	INSUL.	: INSULATION	RM.	: ROOM	W.W.F.	: WELDED WIRE FABRIC
D.S.	: DOWN SPOUT	INT.	: INTERIOR	R.O.	: ROUGH OPENING		
DWG.	: DRAWING						
		JT.	: JOINT				

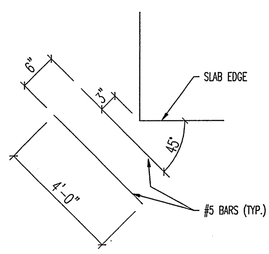

TYPICAL SLAB-ON-GRADE RE-ENTRANT CORNER REINF.
N.T.S.

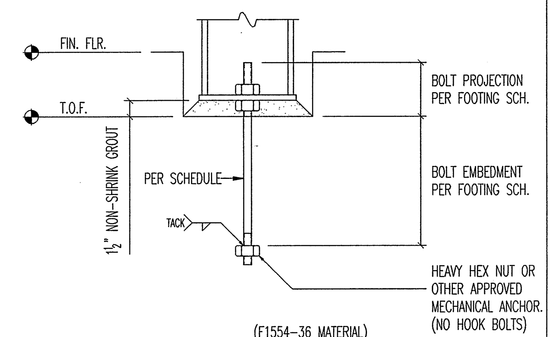

(F1554-36 MATERIAL)

TYPICAL ANCHOR BOLT DETAIL
N.T.S.

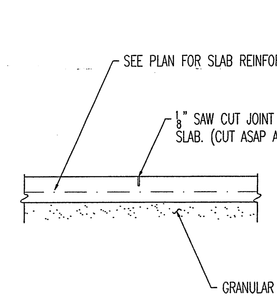

(TYP. CONTROL JOINT - CCJ)

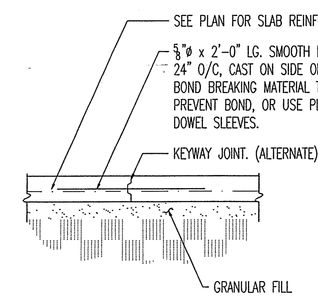

(TYP. CONSTRUCTION JOINT - CJ)

(FLOOR JOINTS SHALL BE SPACED AS SHOWN ON PLAN AND WHERE POSSIBLE FLOOR JOINTS SHALL BE LOCATED ALONG COLUMN LINES.)

TYPICAL SLAB-ON-GRADE JOINT DETAILS
N.T.S.

TYPICAL GRADE BEAM CORNER DETAIL
N.T.S.

RECEIVED
MAY 0 8 2006
INTEGRA CONSTRUCTION, INC.

S&W
Stevens&Wilkinson
STEVENS & WILKINSON STANG & NEWDOW, INC.
ARCHITECTURE ENGINEERING INTERIORS
100 PEACHTREE STREET NW, SUITE 2500
ATLANTA, GA 30303
P 404.522.8888
F 404.521.6204
WWW.SW-SN.COM

idea|span
linking knowledge and design
A STEVENS & WILKINSON COMPANY
100 PEACHTREE STREET NW, SUITE 2400
ATLANTA, GA 30303
P 404.522.8899
F 404.521.6343
www.idea-span.com

NEEDHAM
CONSULTING ENGINEERS
FORT WAYNE
9921 Dupont Circle Drive W - Suite 203
Fort Wayne, Indiana 46825
Phone: 260/497-8400 Fax: 260/497-8414
KANSAS CITY
8417 Santa Fe Drive - Suite 200
Overland Park, Kansas 66212-2727
Phone: 913/385-5300 Fax: 913/385-0978
www.needhamcompanies.com / info@needhamcompanies.com

COLORADO REGISTERED TODD A. HILL 38477 PROFESSIONAL ENGINEER

MAY 0 8 2006

■ SUBMITTALS

DATE	DESCRIPTION
04.26.06	RELEASE ON PRECAST
05.08.06	FOR PRICING/PERMIT

■ REVISIONS

DATE	DESCRIPTION

■ APPROVED FOR CONSTRUCTION
□ NOT APPROVED FOR CONSTRUCTION

THIS DRAWING IS THE PROPERTY OF STEVENS & WILKINSON STANG & NEWDOW, INC. UNAUTHORIZED USE OF ANY KIND, INCLUDING USE ON OTHER PROJECT IS PROHIBITED.
© STEVENS & WILKINSON STANG & NEWDOW, INC.

■ PROJECT NUMBER: 06041.00
■ DATE: 04.05.06
■ FILE: F: /PROJECTS/06041.00/DESIGN

cingular WIRELESS
PUEBLO, COLORADO

Standard Notes & Sections

S1

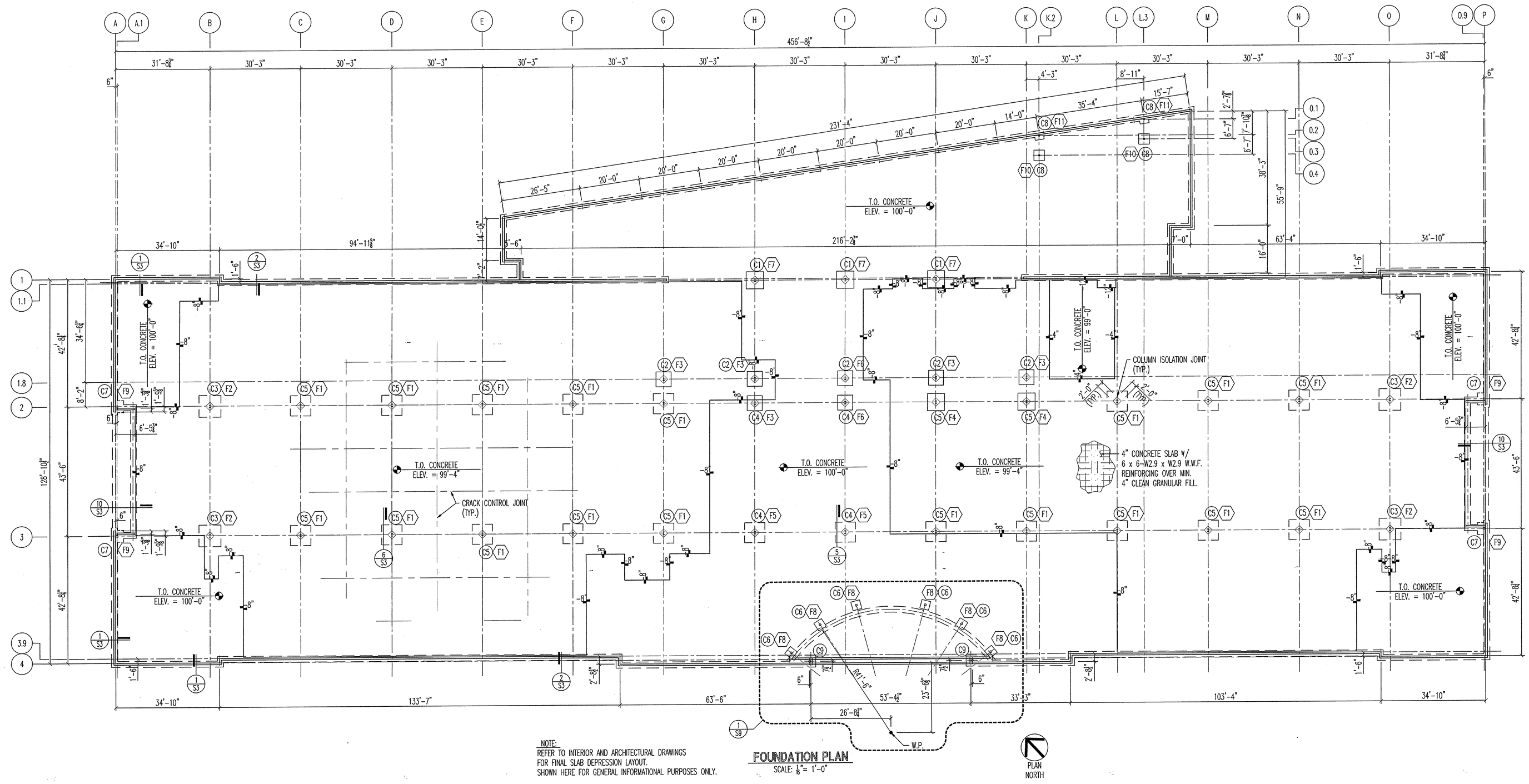

NOTE:
REFER TO INTERIOR AND ARCHITECTURAL DRAWINGS FOR FINAL SLAB DEPRESSION LAYOUT. SHOWN HERE FOR GENERAL INFORMATIONAL PURPOSES ONLY.

FOUNDATION PLAN
SCALE: 1/8" = 1'-0"

FOUNDATION DESIGN FOR 2500psf BEARING CAPACITY.

FOUNDATION SCHEDULE

MARK	FOOTING			ANCHOR BOLTS	
	SIZE (L x W x T)	REINFORCING	TOP / FTG. ELEVATION	QUANTITY AND SIZE	EMBED. LENGTH & PROJECTION
F1	6'-9" x 6'-9" x 1'-3"	(8) #5 EW	98'-10"	(4) ¾"ø	9" / 5"
F2	7'-3" x 7'-3" x 1'-3"	(8) #5 EW	98'-10"	(4) ¾"ø	9" / 5"
F3	5'-0" x 5'-0" x 1'-3"	(6) #5 EW	98'-10"	(4) ¾"ø	9" / 5"
F4	5'-9" x 5'-9" x 1'-3"	(6) #5 EW	98'-10"	(4) ¾"ø	9" / 5"
F5	6'-9" x 6'-9" x 1'-3"	(8) #5 EW	99'-4"	(4) ¾"ø	9" / 5"
F6	5'-0" x 5'-0" x 1'-3"	(6) #5 EW	99'-4"	(4) ¾"ø	9" / 5"
F7	5'-9" x 5'-9" x 1'-3"	(6) #5 EW	99'-4"	(4) ¾"ø	9" / 5"
F8	3'-0" x 3'-0" x 2'-4"	(5) #5 EW	99'-4"	(4) ¾"ø	9" / 5"
F9	4'-0" x 4'-0" x 2'-4"	(6) #5 EW	99'-4"	(4) ¾"ø	9" / 5"
F10	3'-6" x 3'-6" x 2'-4"	(4) #5 EW	99'-4"	(4) ¾"ø	9" / 5"
F11	3'-0" x 3'-0" x 2'-4"	(5) #5 EW	99'-4"	(4) ¾"ø	9" / 5"

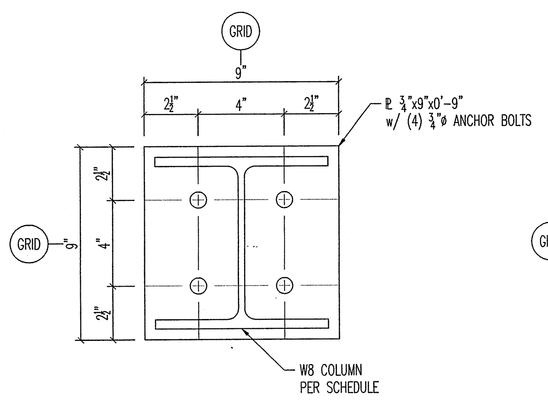

BASE PLATE DETAIL (A / S3)
SCALE: 3" = 1'-0"

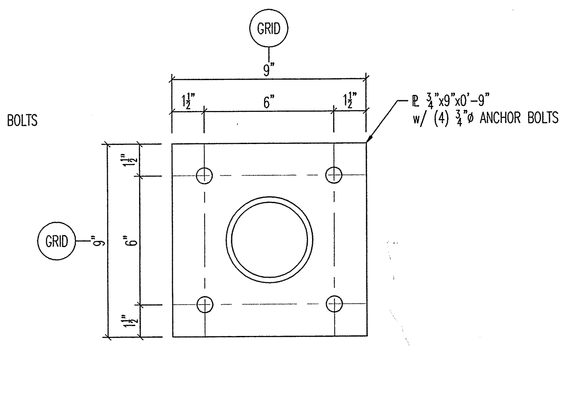

BASE PLATE DETAIL (B / S3)
SCALE: 3" = 1'-0"

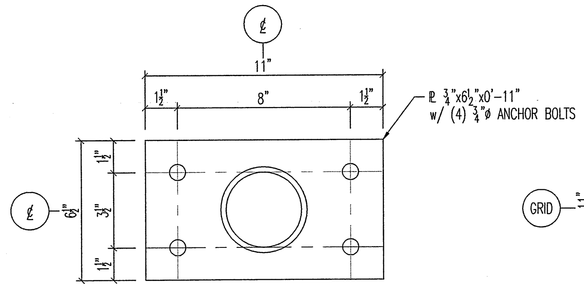

BASE PLATE DETAIL (C / S3)
SCALE: 3" = 1'-0"

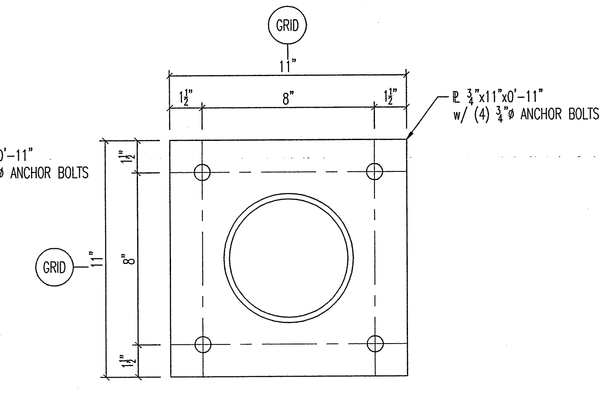

BASE PLATE DETAIL (D / S3)
SCALE: 3" = 1'-0"

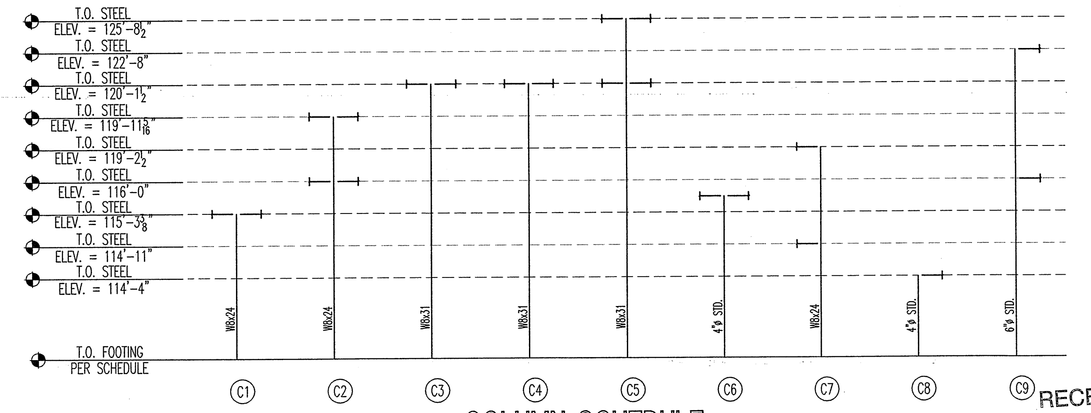

COLUMN SCHEDULE

RECEIVED
MAY 08 2006
INTEGRA CONSTRUCTION, INC.

S&W
Stevens&Wilkinson
STEVENS & WILKINSON STANG & NEWDOW, INC.
ARCHITECTURE ENGINEERING INTERIORS
100 PEACHTREE STREET NW, SUITE 2500
ATLANTA, GA 30303
P 404.522.8888
F 404.521.6204
WWW.SW-SN.COM

idea|span
linking knowledge and design
A STEVENS & WILKINSON COMPANY
100 PEACHTREE STREET NW, SUITE 2400
ATLANTA, GA 30303
P 404.522.8899
F 404.521.6343
www.idea-span.com

NEEDHAM CONSULTING ENGINEERS
FORT WAYNE
9921 Dupont Circle Drive W – Suite 203
Fort Wayne, Indiana 46825
Phone: 260/497-8400 Fax: 260/497-8414
KANSAS CITY
8417 Santa Fe Drive – Suite 200
Overland Park, Kansas 66212-2727
Phone: 913/385-5300 Fax: 913/385-0978
www.needhamcompanies.com / info@needhamcompanies.com

COLORADO REGISTERED TODD A. HILL 38477 PROFESSIONAL ENGINEER
MAY 08 2006

■ SUBMITTALS

DATE	DESCRIPTION
04.26.06	RELEASE ON PRECAST
05.08.06	FOR PRICING/PERMIT

■ REVISIONS

DATE	DESCRIPTION

■ APPROVED FOR CONSTRUCTION
□ NOT APPROVED FOR CONSTRUCTION

THIS DRAWING IS THE PROPERTY OF STEVENS & WILKINSON STANG & NEWDOW, INC. UNAUTHORIZED USE OF ANY KIND, INCLUDING USE ON OTHER PROJECT IS PROHIBITED.
© STEVENS & WILKINSON STANG & NEWDOW, INC.

■ PROJECT NUMBER: 06041.00
■ DATE: 04.05.06
■ FILE: F: /PROJECTS/06041.00/DESIGN

cingular WIRELESS
PUEBLO, COLORADO

Foundation Plan & Schedules

S2

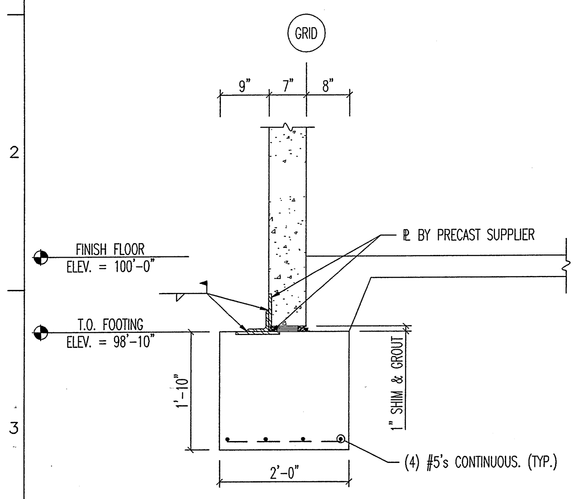

SECTION @ PERIMETER WALL (1/S3)
SCALE: ¾" = 1'-0"

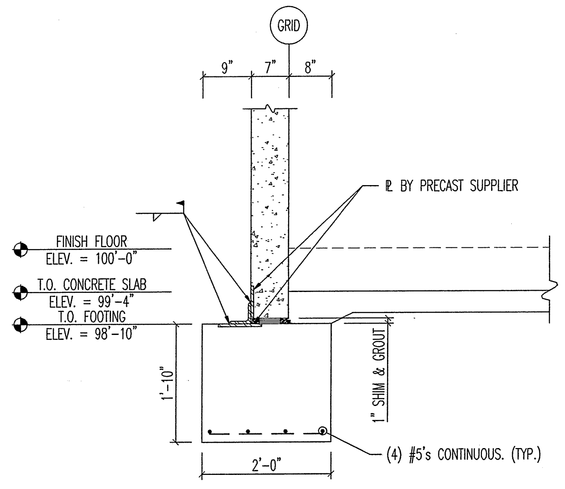

SECTION @ PERIMETER WALL (2/S3)
SCALE: ¾" = 1'-0"

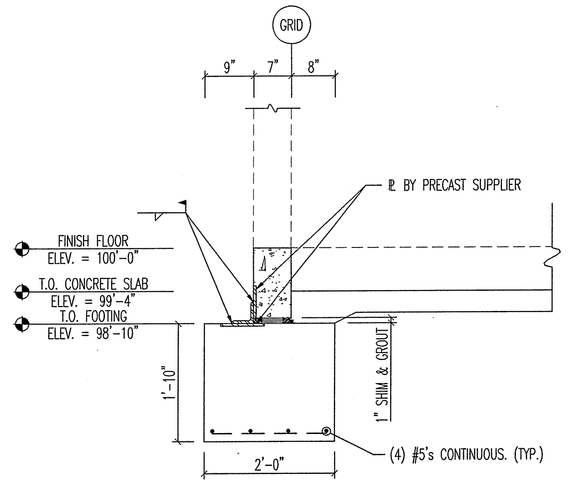

SECTION @ OPENING (3/S3)
SCALE: ¾" = 1'-0"

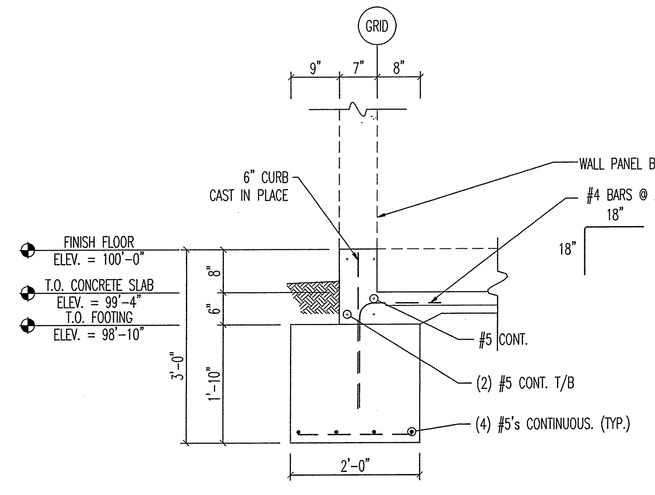

SECTION AT OPENING (4/S3)
SCALE: ¾" = 1'-0"

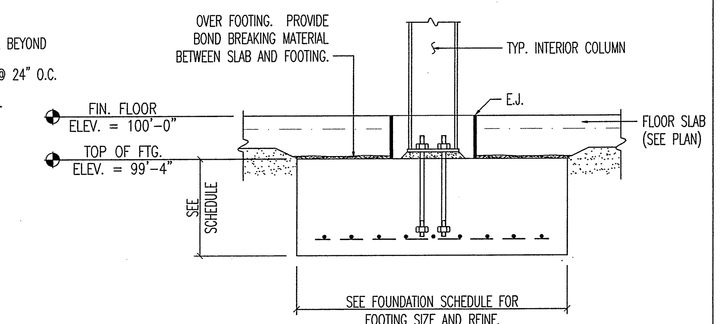

INTERIOR COLUMN FOOTING (5/S3)
N.T.S.

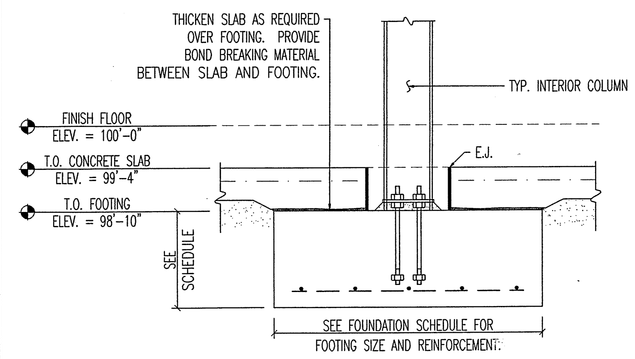

RECESSED INTERIOR COLUMN FOOTNG (6/S3)
N.T.S.

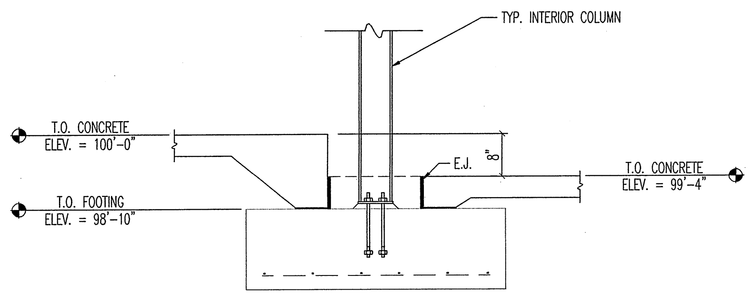

INTERIOR COLUMN FOOTING (7/S3)
SCALE: ¾" = 1'-0"

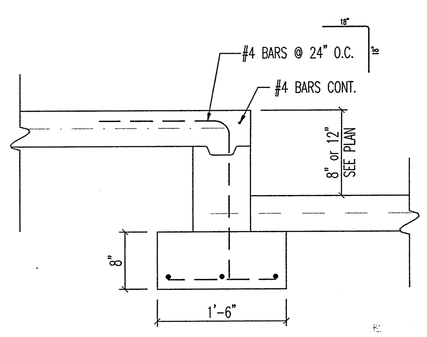

SLAB STEP (8/S3)
SCALE: 1" = 1'-0"

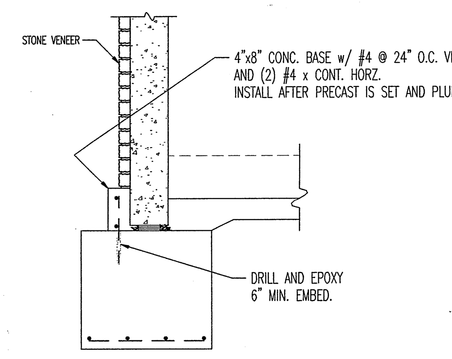

SECTION AT STONE VENEER (9/S3)
SCALE: 1" = 1'-0"

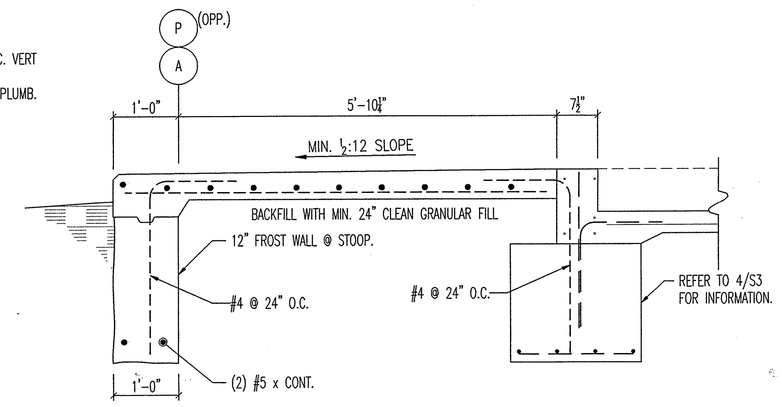

SECTION @ COVERED STOOP (10/S3)
SCALE: ¾" = 1'-0"

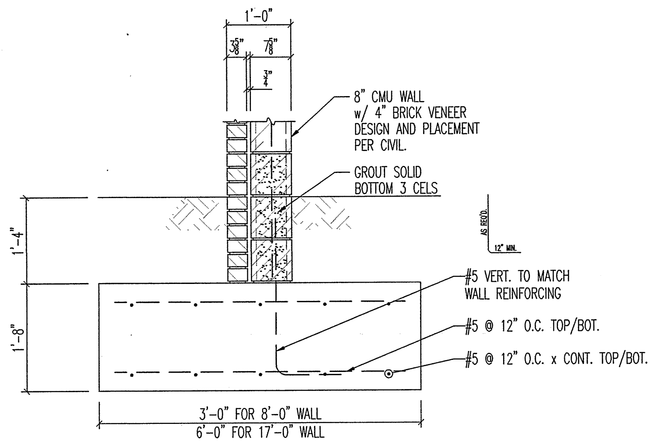

SECTION @ ENCLOSURES (11/S3)
SCALE: ¾" = 1'-0"

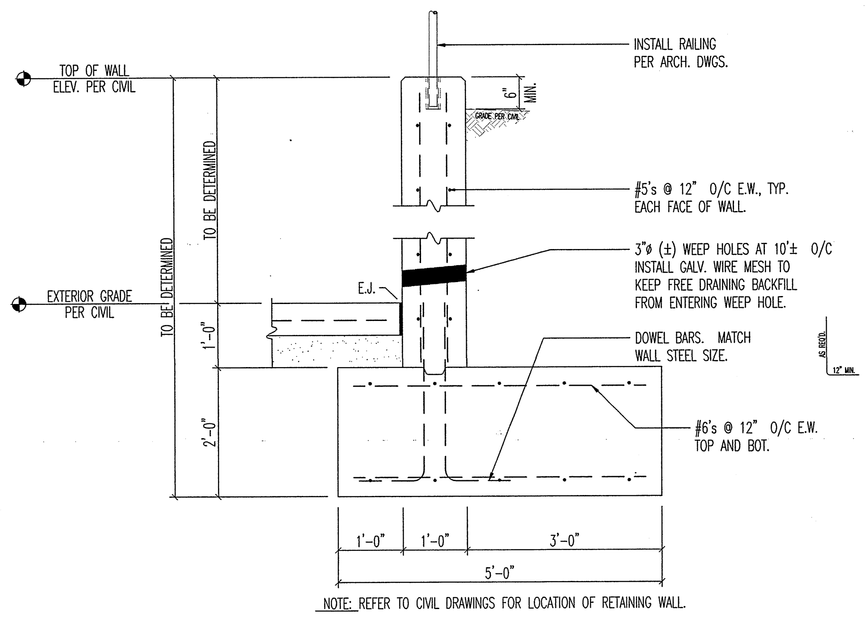

SECTION @ RETAINING WALL (12/S3)
SCALE: ¾" = 1'-0"

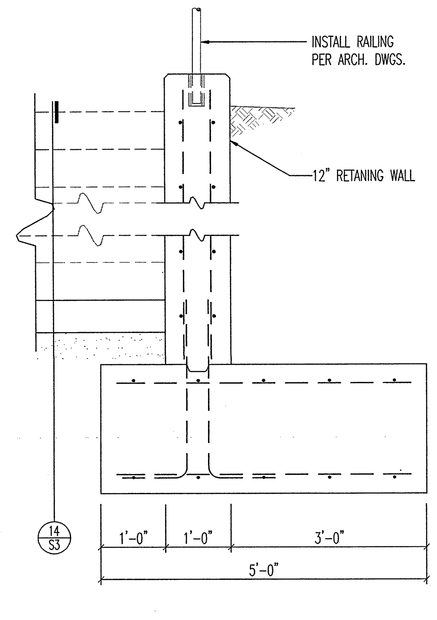

SECTION @ CONCRETE STAIRS (13/S3)
SCALE: ¾" = 1'-0"

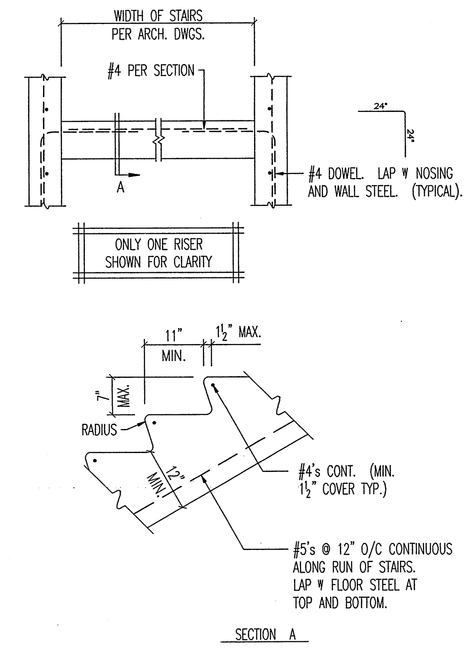

SECTIONS @ CONCRETE STAIRS (14/S3)
SCALE: ¾" = 1'-0"

RECEIVED
MAY 0 8 2006
INTEGRA CONSTRUCTION, INC.

S&W
Stevens&Wilkinson
STEVENS & WILKINSON STANG & NEWDOW, INC.
ARCHITECTURE ENGINEERING INTERIORS
100 PEACHTREE STREET NW, SUITE 2500
ATLANTA, GA 30303
P 404.522.8888
F 404.521.6204
WWW.SW-SN.COM

idea|span
linking knowledge and design
A STEVENS & WILKINSON COMPANY
100 PEACHTREE STREET NW, SUITE 2400
ATLANTA, GA 30303
P 404.522.8899
F 404.521.6343
www.idea-span.com

NEEDHAM
CONSULTING ENGINEERS
FORT WAYNE
9921 Dupont Circle Drive W - Suite 203
Fort Wayne, Indiana 46825
Phone: 260/497-8400 Fax: 260/497-8414
KANSAS CITY
8417 Santa Fe Drive - Suite 200
Overland Park, Kansas 66212-2727
Phone: 913/385-5300 Fax: 913/385-0978
www.needhamcompanies.com / info@needhamcompanies.com

COLORADO REGISTERED
TODD A. HALL
38477
PROFESSIONAL ENGINEER
MAY 0 8 2006

■ SUBMITTALS

DATE	DESCRIPTION
04.26.06	RELEASE ON PRECAST
05.08.06	FOR PRICING/PERMIT

■ REVISIONS

DATE	DESCRIPTION

■ APPROVED FOR CONSTRUCTION
□ NOT APPROVED FOR CONSTRUCTION

THIS DRAWING IS THE PROPERTY OF STEVENS & WILKINSON STANG & NEWDOW, INC. UNAUTHORIZED USE OF ANY KIND, INCLUDING USE ON OTHER PROJECT IS PROHIBITED.
© STEVENS & WILKINSON STANG & NEWDOW, INC.

■ PROJECT NUMBER: 06041.00
■ DATE: 04.05.06
■ FILE: F: /PROJECTS/06041.00/DESIGN

cingular WIRELESS
PUEBLO, COLORADO

Foundation Details

S3

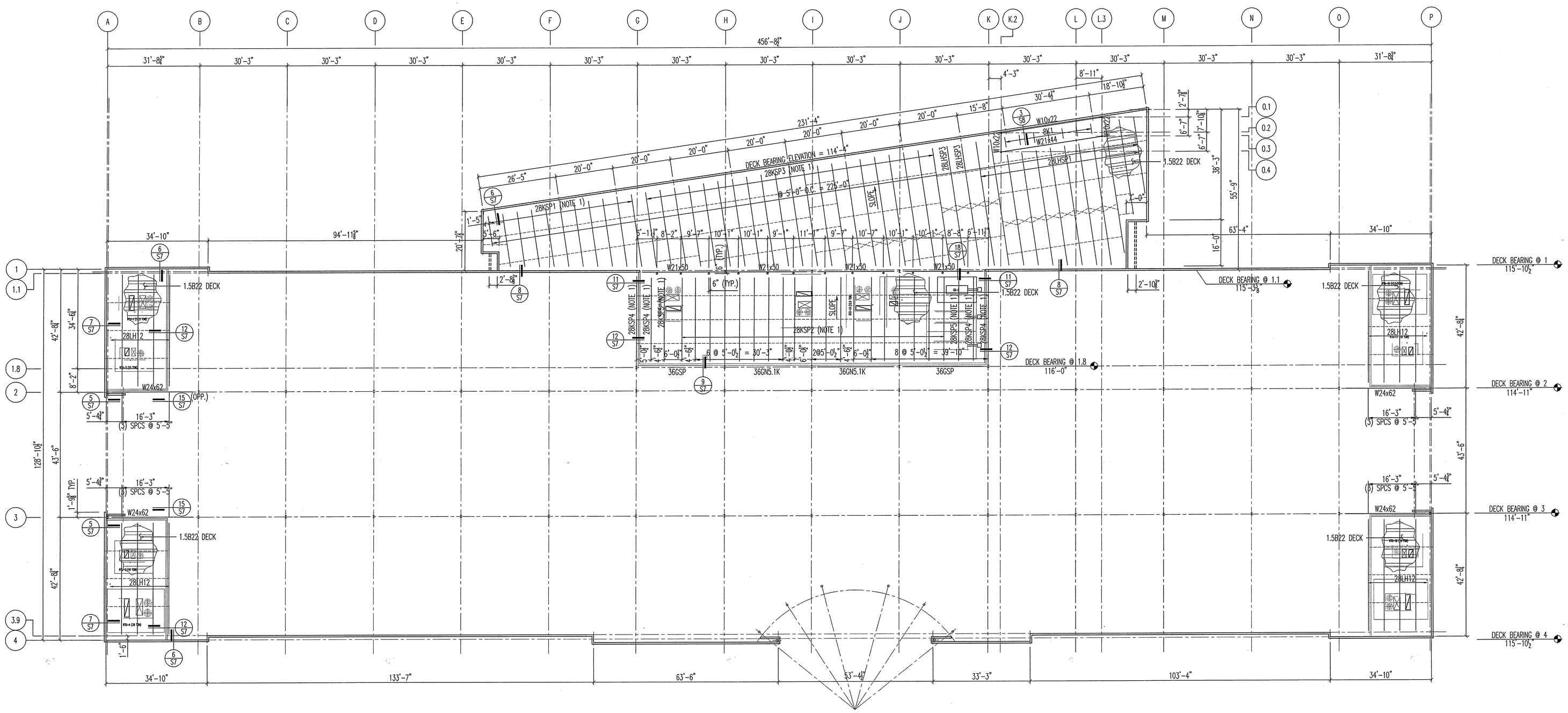

PARTIAL ROOF FRAMING PLAN

SCALE: $\frac{1}{8}$"= 1'-0"

PLAN NORTH

NOTE:

1. WHERE INDICATED ON PLAN, K SERIES JOISTS SHALL HAVE 5" DEEP SEATS.
2. LOADS INDICATED IN DIAGRAMS ARE SERVICE LOADS
3. (XXX'-X") INDICATES DECK BEARING ELEVATION
4. >><<INDICATES BOLTED "X" BRIDGING
5. --------INDICATES HORIZONTAL BRIDGING
6. EACH BAY SHALL HAVE A SINGLE LINE OF BOTTOM CHORD BRIDGING NEAR FIRST BOTTOM CHORD PANEL POINTS AT EACH END OF JOIST. (NOT SHOWN ON PLAN)

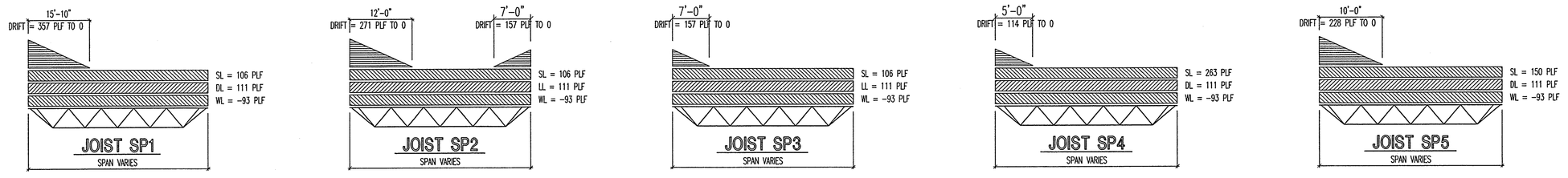

JOIST LOADING DIAGRAM

N.T.S.

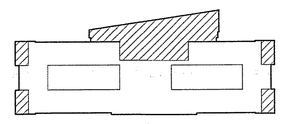

KEY PLAN

RECEIVED
MAY 0 8 2006
INTEGRA CONSTRUCTION, INC.

Stevens&Wilkinson
STEVENS & WILKINSON STANG & NEWDOW, INC.
ARCHITECTURE ENGINEERING INTERIORS
100 PEACHTREE STREET NW, SUITE 2500
ATLANTA, GA 30303
P 404.522.8888
F 404.521.6204
WWW.SW-SN.COM

idea|span
linking knowledge and design
A STEVENS & WILKINSON COMPANY
100 PEACHTREE STREET NW, SUITE 2400
ATLANTA, GA 30303
P 404.522.8899
F 404.521.6343
www.idea-span.com

NEEDHAM CONSULTING ENGINEERS
FORT WAYNE
9921 Dupont Circle Drive W – Suite 203
Fort Wayne, Indiana 46825
Phone: 260/497-8400 Fax: 260/497-8414
KANSAS CITY
8417 Santa Fe Drive – Suite 200
Overland Park, Kansas 66212-2727
Phone: 913/385-5300 Fax: 913/385-0978
www.needhamcompanies.com / info@needhamcompanies.com

COLORADO REGISTERED 38477 PROFESSIONAL ENGINEER

MAY 0 8 2006

■ SUBMITTALS

DATE	DESCRIPTION
04.26.06	RELEASE ON PRECAST
05.08.06	FOR PRICING/PERMIT

■ REVISIONS

DATE	DESCRIPTION

■ APPROVED FOR CONSTRUCTION
□ NOT APPROVED FOR CONSTRUCTION

THIS DRAWING IS THE PROPERTY OF STEVENS & WILKINSON STANG & NEWDOW, INC. UNAUTHORIZED USE OF ANY KIND, INCLUDING USE ON OTHER PROJECT IS PROHIBITED.

© STEVENS & WILKINSON STANG & NEWDOW, INC.

■ PROJECT NUMBER: 06041.00
■ DATE: 04.05.06
■ FILE: F:/PROJECTS/06041.00/DESIGN

cingular WIRELESS
PUEBLO, COLORADO

Low Roof Framing Plan

S4

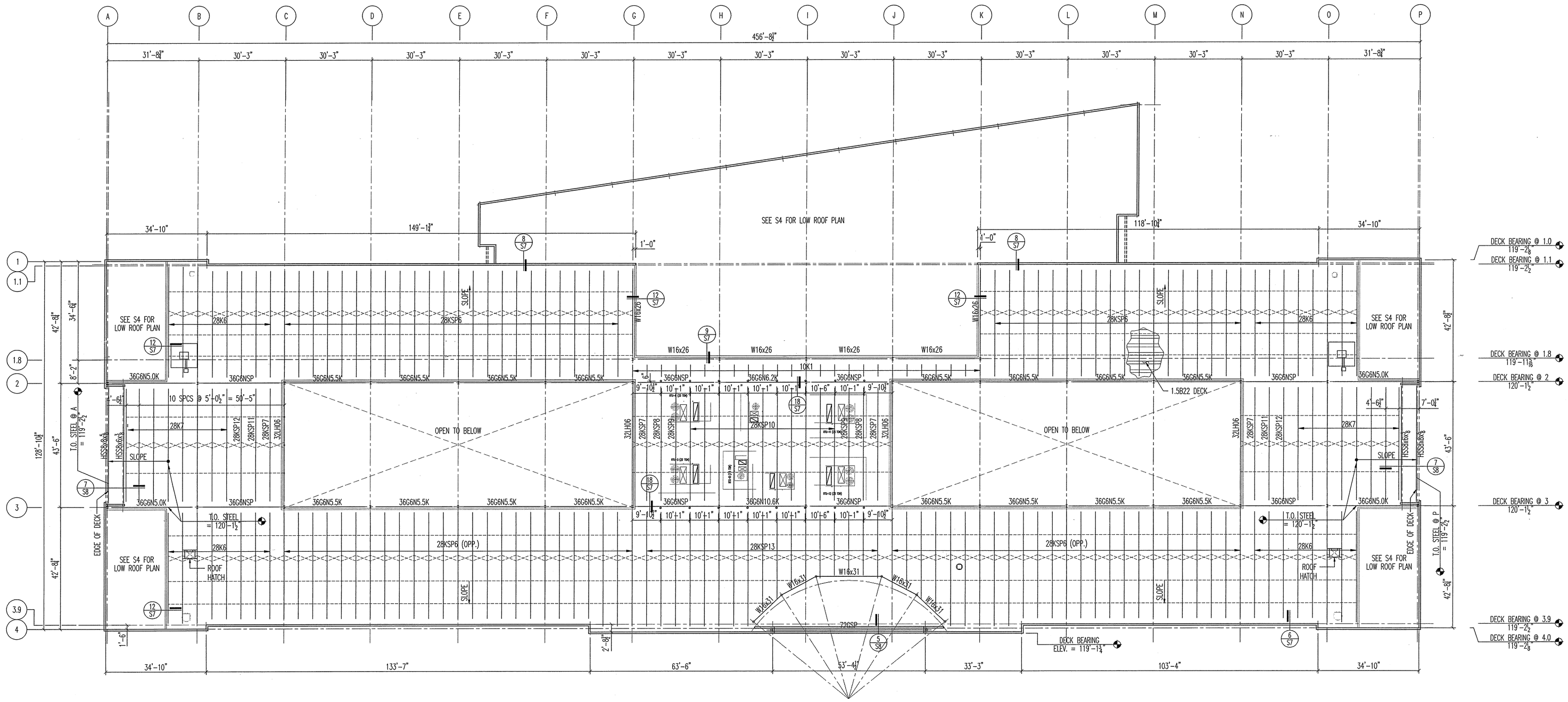

PARTIAL ROOF FRAMING PLAN

SCALE: ⅛"= 1'-0"

PLAN NORTH

NOTE:

1. LOADS INDICATED IN DIAGRAMS ARE SERVICE LOADS
2. (XXX'-X") INDICATES DECK BEARING ELEVATION
3. ><><>< INDICATES BOLTED "X" BRIDGING
4. -------- INDICATES HORIZONTAL BRIDGING
5. EACH BAY SHALL HAVE A SINGLE LINE OF BOTTOM CHORD BRIDGING NEAR FIRST BOTTOM CHORD PANEL POINTS AT EACH END OF JOIST. (NOT SHOWN ON PLAN)

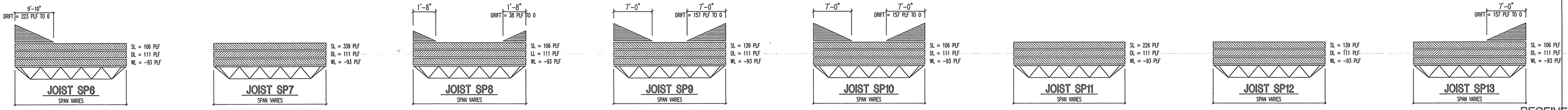

JOIST LOADING DIAGRAM

N.T.S.

RECEIVED
MAY 0 8 2006
INTEGRA CONSTRUCTION, INC.

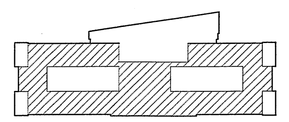

KEY PLAN

S&W

Stevens&Wilkinson
STEVENS & WILKINSON STANG & NEWDOW, INC.
ARCHITECTURE ENGINEERING INTERIORS

100 PEACHTREE STREET NW, SUITE 2500
ATLANTA, GA 30303
P 404.522.8888
F 404.521.6204
WWW.SW-SN.COM

idea|span
linking knowledge and design
A STEVENS & WILKINSON COMPANY

100 PEACHTREE STREET NW, SUITE 2400
ATLANTA, GA 30303
P 404.522.8899
F 404.521.6343
www.idea-span.com

NEEDHAM
CONSULTING ENGINEERS
FORT WAYNE
9921 Dupont Circle Drive W – Suite 203
Fort Wayne, Indiana 46825
Phone: 260/497-8400 Fax: 260/497-8414
KANSAS CITY
8417 Santa Fe Drive – Suite 200
Overland Park, Kansas 66212-2727
Phone: 913/385-3300 Fax: 913/385-0978
www.needhamcompanies.com / info@needhamcompanies.com

COLORADO REGISTERED TODD A. HALL 39477 PROFESSIONAL ENGINEER

MAY 0 8 2006

■ SUBMITTALS

DATE	DESCRIPTION
04.26.06	RELEASE ON PRECAST
05.08.06	FOR PRICING/PERMIT

■ REVISIONS

DATE	DESCRIPTION

■ APPROVED FOR CONSTRUCTION
□ NOT APPROVED FOR CONSTRUCTION

THIS DRAWING IS THE PROPERTY OF STEVENS & WILKINSON STANG & NEWDOW, INC. UNAUTHORIZED USE OF ANY KIND, INCLUDING USE ON OTHER PROJECT IS PROHIBITED.

© STEVENS & WILKINSON STANG & NEWDOW, INC.

■ PROJECT NUMBER: 06041.00
■ DATE: 04.05.06
■ FILE: F: /PROJECTS/06041.00/DESIGN

cingular WIRELESS
PUEBLO, COLORADO

Main Roof Framing Plan

S5

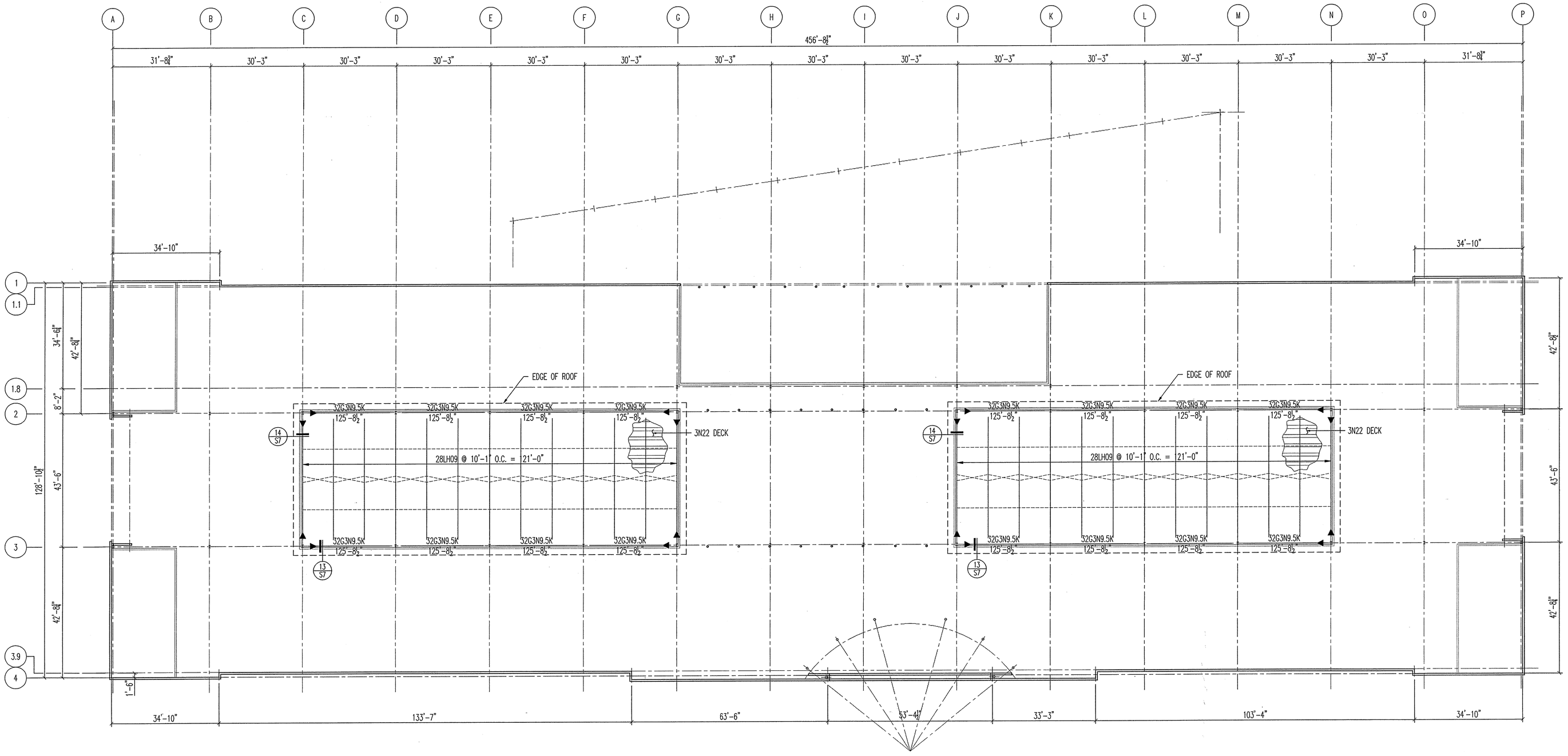

PARTIAL ROOF @ CLERESTORY PLAN

SCALE: 1/8" = 1'-0"

PLAN NORTH

NOTE:

1. (XXX'-X") INDICATES DECK BEARING ELEVATION
2. >><<>><< INDICATES BOLTED "X" BRIDGING
3. -------- INDICATES HORIZONTAL BRIDGING
4. EACH BAY SHALL HAVE A SINGLE LINE OF BOTTOM CHORD BRIDGING NEAR FIRST BOTTOM CHORD PANEL POINTS AT EACH END OF JOIST. (NOT SHOWN ON PLAN)
5. ▶ INDICATES MOMENT CONNECTION

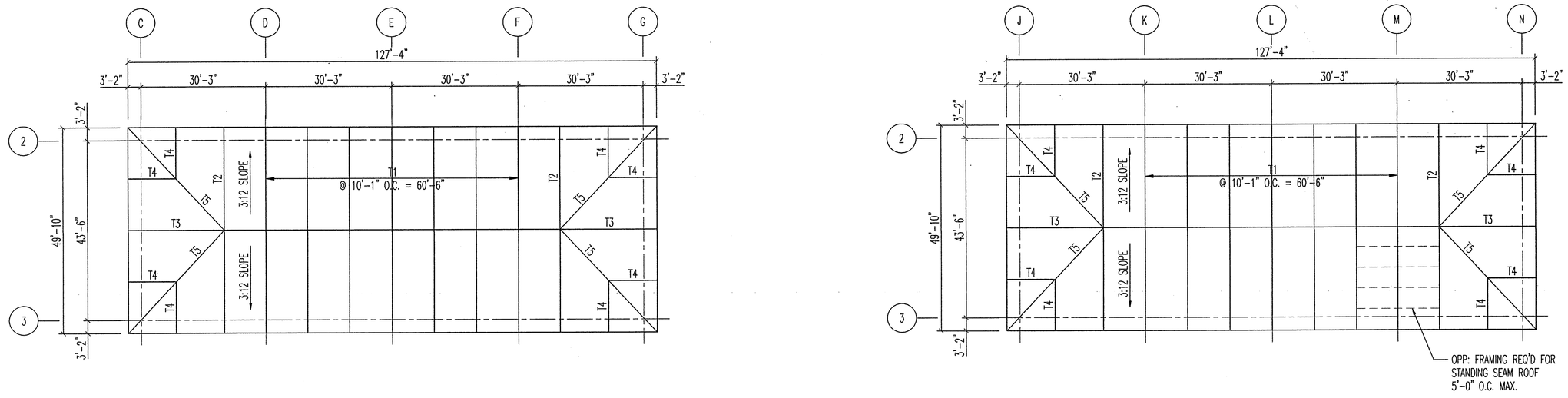

HIP ROOF @ CLERESTORY PLAN

SCALE: 1/8" = 1'-0"

PLAN NORTH

NOTE:
REFER TO SHEET S1 FOR LOADING ON TRUSS (METAL STUD FRAMING)

KEY PLAN

RECEIVED
MAY 08 2006
INTEGRA CONSTRUCTION, INC.

MAY 08 2006

S&W

Stevens&Wilkinson
STEVENS & WILKINSON STANG & NEWDOW, INC.
ARCHITECTURE ENGINEERING INTERIORS

100 PEACHTREE STREET NW, SUITE 2500
ATLANTA, GA 30303
P 404.522.8888
F 404.521.6204
WWW.SW-SN.COM

idea|span
linking knowledge and design
A STEVENS & WILKINSON COMPANY

100 PEACHTREE STREET NW, SUITE 2400
ATLANTA, GA 30303
P 404.522.8899
F 404.521.6343
www.idea-span.com

NEEDHAM CONSULTING ENGINEERS

FORT WAYNE
9921 Dupont Circle Drive W – Suite 203
Fort Wayne, Indiana 46825
Phone: 260/497-8400 Fax: 260/497-8414

KANSAS CITY
8417 Santa Fe Drive – Suite 200
Overland Park, Kansas 66212-2727
Phone: 913/385-5300 Fax: 913/385-0978

www.needhamcompanies.com / info@needhamcompanies.com

COLORADO REGISTERED
TODD A. HALL
38477
PROFESSIONAL ENGINEER

■ SUBMITTALS

DATE	DESCRIPTION
04.26.06	RELEASE ON PRECAST
05.08.06	FOR PRICING/PERMIT

■ REVISIONS

DATE	DESCRIPTION

■ APPROVED FOR CONSTRUCTION
□ NOT APPROVED FOR CONSTRUCTION

THIS DRAWING IS THE PROPERTY OF STEVENS & WILKINSON STANG & NEWDOW, INC. UNAUTHORIZED USE OF ANY KIND, INCLUDING USE ON OTHER PROJECT IS PROHIBITED.

© STEVENS & WILKINSON STANG & NEWDOW, INC.

■ PROJECT NUMBER: 06041.00
■ DATE: 04.05.06
■ FILE: F:/PROJECTS/06041.00/DESIGN

cingular WIRELESS
PUEBLO, COLORADO

Clerestory Framing Plan

S6

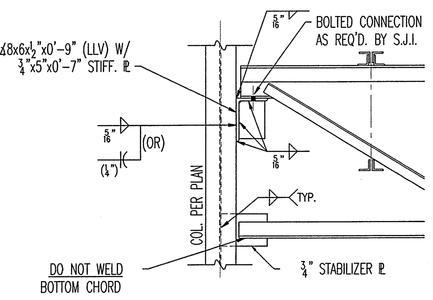

TYPICAL SEATED GIRDER CONN. (1 / S7)
SCALE: ¾"=1'-0"

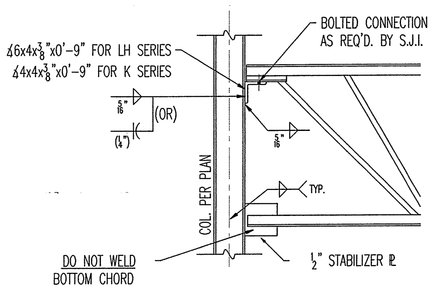

TYPICAL SEATED JOIST CONN. (2 / S7)
SCALE: ¾"=1'-0"

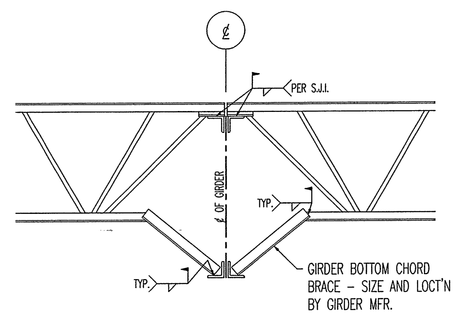

TYPICAL JOIST TO GIRDER CONN. (3 / S7)
SCALE: ¾"=1'-0"

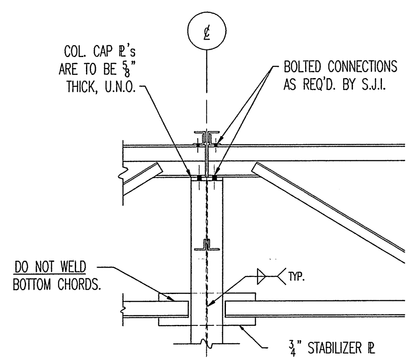

TYPICAL GIRDER TO COLUMN CONN. (4 / S7)
SCALE: ¾"=1'-0"

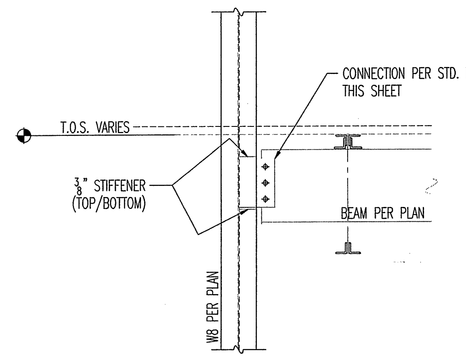

SECTION AT BEAM TO COL. (5 / S7)
SCALE: ¾"=1'-0"

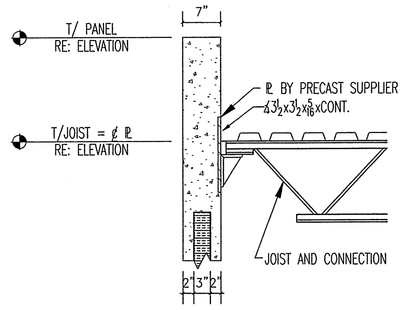

TYPICAL JOIST CONN. @ PRE-CAST (6 / S7)
SCALE: ¾"=1'-0"

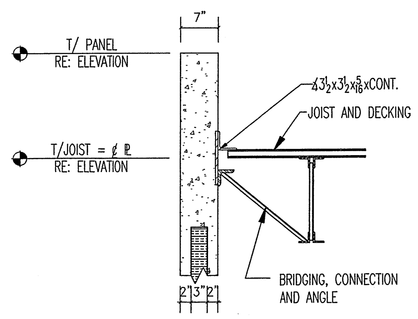

TYPICAL CONN. @ PRE-CAST (7 / S7)
SCALE: ¾"=1'-0"

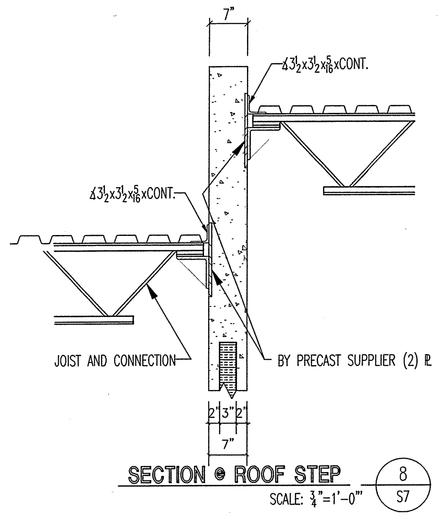

SECTION @ ROOF STEP (8 / S7)
SCALE: ¾"=1'-0"

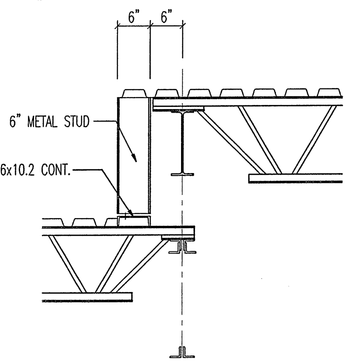

SECTION @ ROOF STEP (9 / S7)
SCALE: ¾"=1'-0"

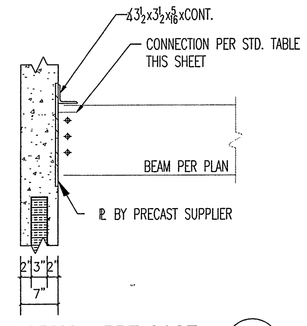

TYPICAL WF BEAM @ PRE-CAST. (10 / S7)
SCALE: ¾"=1'-0"

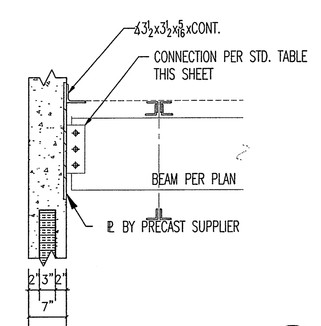

TYPICAL WF BEAM @ PRE-CAST. (11 / S7)
SCALE: ¾"=1'-0"

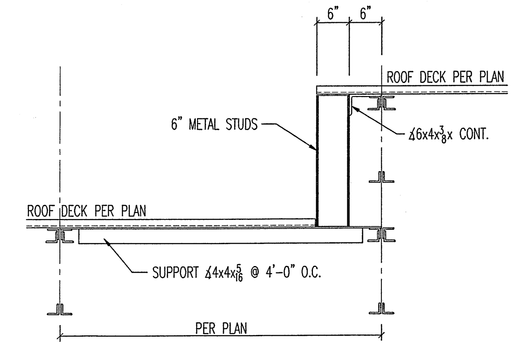

SECTION @ ROOF STEP (12 / S7)
SCALE: ¾" = 1'-0"

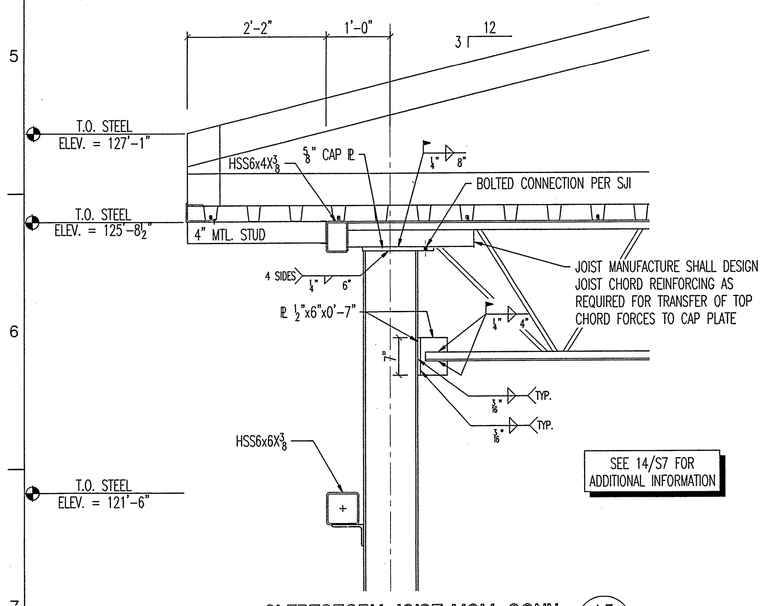

CLERESTORY JOIST MOM. CONN. (13 / S7)
SCALE: ¾"=1'-0"

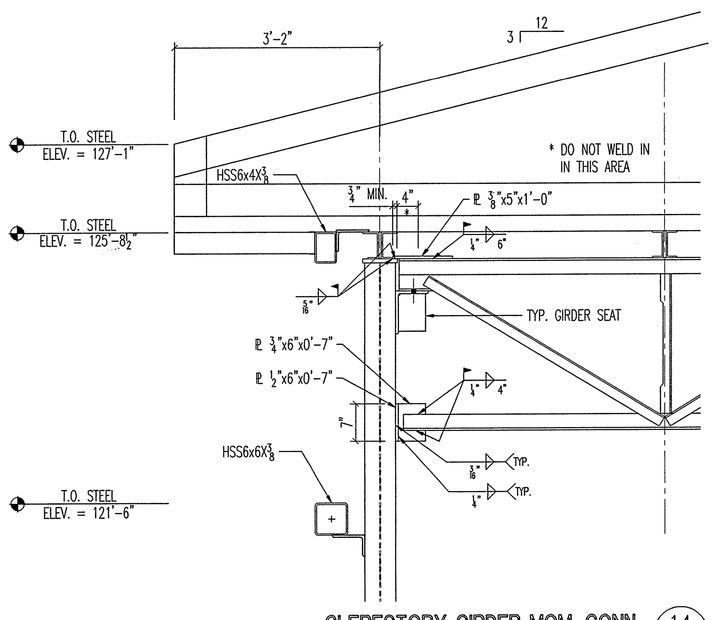

CLERESTORY GIRDER MOM. CONN. (14 / S7)
SCALE: ¾"=1'-0"

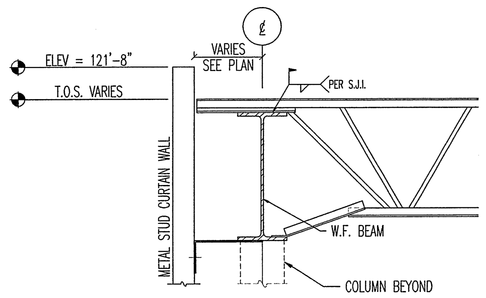

SECTION @ CURTAIN WALL (15 / S7)
SCALE: ¾"=1'-0"

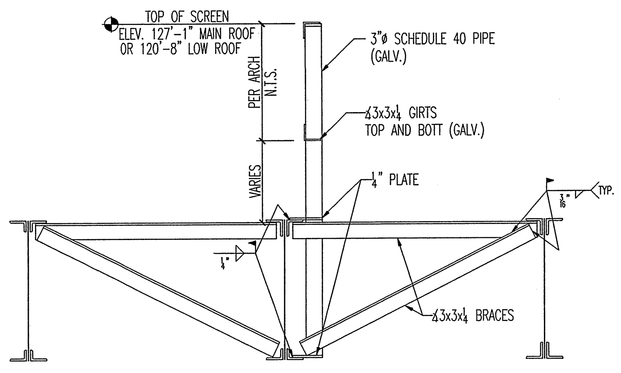

MECHANICAL SCREEN SUPPORT (18 / S7)
SCALE: ¾"=1'-0"

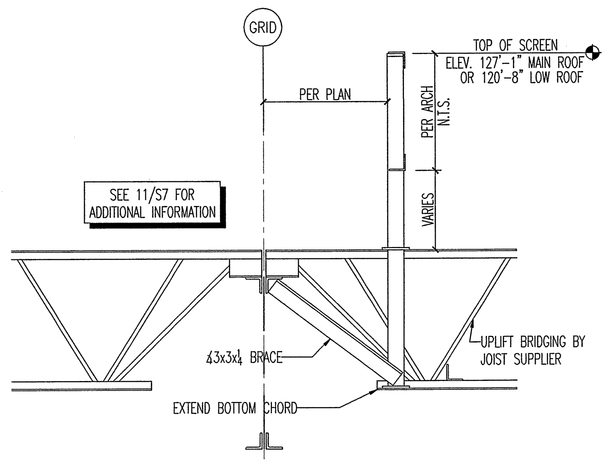

MECHANICAL SCREEN SUPPORT (19 / S7)
SCALE: ¾"=1'-0"

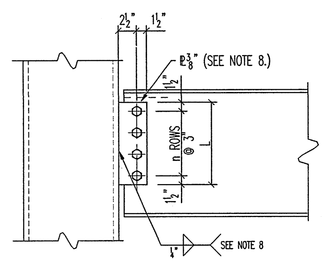

"n"	L (INCHES)	LRFD CONNECTION CAPACITY (KIPS) (¾"ø A325 BOLTS)	ASD CONNECTION CAPACITY (KIPS) (¾"ø A325 BOLTS)
2	6"	31.8	21.2
3	9"	47.7	31.8
4	12"	63.6	42.4
5	15"	79.5	53.0
6	18"	95.4	63.6
8	24"	127.0	84.8

TYPICAL SHEAR TAB CONNECTION DETAIL
N.T.S.

CONNECTION NOTES:

1. REFER TO AISC – MANUAL OF STEEL CONSTRUCTION.
2. FOR COPED BEAM CONNECTIONS, THE CAPACITY OF THE NET SHEAR AREA OF THE WEB SHALL BE VERIFIED BY THE FABRICATOR.
3. THE CAPACITY OF THE CONNECTION SHALL BE THE LESSER VALUE OF THE ALLOWABLE BOLT CAPACITY, ALLOWABLE WELD CAPACITY, SUPPORTING PLATE CAPACITY OR THE WEB NET SHEAR CAPACITY.
4. THE MINIMUM NUMBER OF ROWS OF BOLTS SHALL BE AS FOLLOWS:

W10 & W12	2 ROWS
W14 & W16	3 ROWS
W18 & W21	4 ROWS
W24 & W27 & W30	6 ROWS
W33 & W36	8 ROWS

5. CONNECTIONS TO HSS COLUMNS SHALL BE SINGLE PLATE (SHEAR TAB) OR THRU-PLATE TYPE. SEE AISC MANUAL FOR TYPICAL DETAILS AND CONNECTION CAPACITIES.
6. TYP. SKEWED CONNECTION: USE ¾" BENT PLATE (LENGTH = "l" DIM MINUS 1") WITH ⅜" FILLET WELD BOTH SIDES. BOLT TO CONNECTING PART W 1"ø A325-N BOLTS.
7. FINAL SHEAR CONNECTION DESIGN SHALL BE PERFORMED BY THE FABRICATOR.
8. FOR W36 MEMBERS, USE A ½" ℄ & A ¾" FILLET WELD.

RECEIVED
MAY 0 9 2006
INTEGRA CONSTRUCTION, INC.

S&W
Stevens&Wilkinson
STEVENS & WILKINSON STANG & NEWDOW, INC.
ARCHITECTURE ENGINEERING INTERIORS
100 PEACHTREE STREET NW, SUITE 2500
ATLANTA, GA 30303
P 404.522.8888
F 404.521.6204
WWW.SW-SN.COM

idea|span
linking knowledge and design
A STEVENS & WILKINSON COMPANY
100 PEACHTREE STREET NW, SUITE 2400
ATLANTA, GA 30303
P 404.522.8899
F 404.521.6343
www.idea-span.com

NEEDHAM
CONSULTING ENGINEERS
FORT WAYNE
9921 Dupont Circle Drive W – Suite 203
Fort Wayne, Indiana 46825
Phone: 260/497-8400 Fax: 260/497-8414
KANSAS CITY
8417 Santa Fe Drive – Suite 200
Overland Park, Kansas 66212-2727
Phone: 913/385-5300 Fax: 913/385-0978
www.needhamcompanies.com / info@needhamcompanies.com

COLORADO REGISTERED TODD A. HILL 38477 PROFESSIONAL ENGINEER

MAY 0 8 2006

■ SUBMITTALS

DATE	DESCRIPTION
04.26.06	RELEASE ON PRECAST
05.08.06	FOR PRICING/PERMIT

■ REVISIONS

DATE	DESCRIPTION

■ APPROVED FOR CONSTRUCTION
□ NOT APPROVED FOR CONSTRUCTION

THIS DRAWING IS THE PROPERTY OF STEVENS & WILKINSON STANG & NEWDOW, INC. UNAUTHORIZED USE OF ANY KIND, INCLUDING USE ON OTHER PROJECT IS PROHIBITED.
© STEVENS & WILKINSON STANG & NEWDOW, INC.

■ PROJECT NUMBER: 06041.00
■ DATE: 04.05.06
■ FILE: F:/PROJECTS/06041.00/DESIGN

cingular WIRELESS
PUEBLO, COLORADO

Framing Details

S7

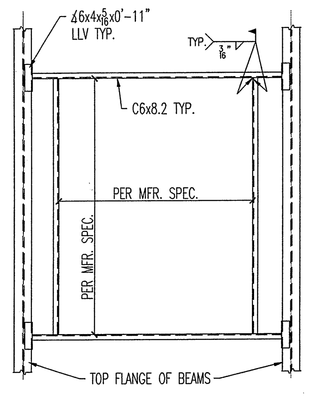

TYPICAL RTU ROOF OPENING DETAIL
N.T.S.

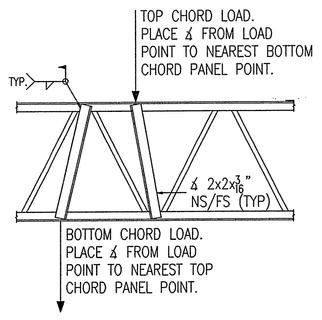

EXTRA VERTICAL DETAIL
N.T.S.

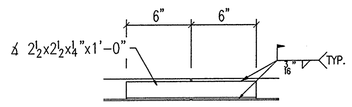

AT PRE-CAST LOCATIONS, SEE DETAILS SPECIFICALLY DESIGNED FOR PERIMETER ANGLE TO PRE-CAST CONNECTIONS

PERIMETER ANGLE SPLICE DETAIL
N.T.S.

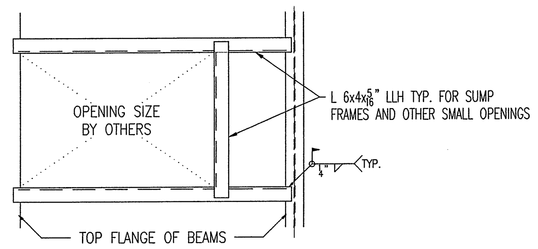

USE JOIST AS ONE SIDE OF OPENING WHEREVER POSSIBLE. IF UNABLE TO USE JOIST AS ONE SIDE OF OPENING, A SECOND ANGLE IS TO BE USED.

(NOT TO BE USED FOR RTU SUPPORT)

TYPICAL SMALL ROOF OPENING DETAIL
N.T.S.

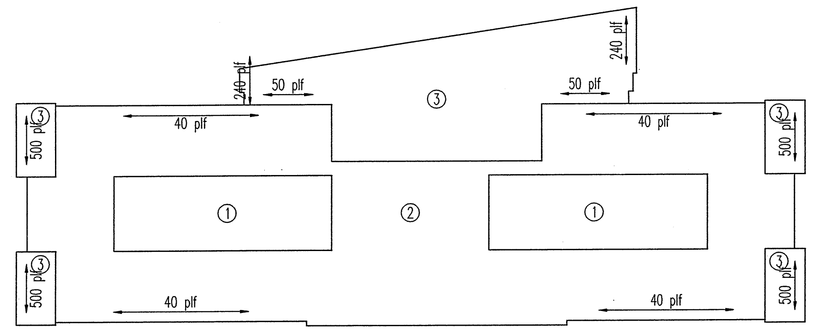

DECK NOTES:
1. DECK FASTENERS SHALL BE #12 TEK SCREWS @ SUPPORTS & #10 TEK @ SIDELAPS. OR APPROVED EQUAL. INSTALL PER MFR. SPECIFICATIONS.
2. FASTEN DECK PER PATTERNS SPECIFIED AND NOT LESS THAN 12" O.C. AT DECK PERIMETER IF NOT OTHERWISE SPECIFIED.
3. FASTEN DECK TO RTU SUPPORT FRAMES AT 12" O.C. MAX.

① 3N 22ga. DECK W/ 24/4 FASTENER PATTERN AND (3) #10 TEK SCREWS EQ. SP. AT SIDELAPS.
② 1.5B 22ga. GALV. DECK W/ 36/7 FASTENER PATTERN AND (5) #10 TEK SCREWS EQ. SP. AT SIDELAPS.
③ 1.5B 22ga. GALV. DECK W/ 36/4 FASTENER PATTERN AND (3) #10 TEK SCREWS EQ. SP. AT SIDELAPS.

DECK ATTACHMENT PLAN
SCALE 1"=50'

PLAN NORTH

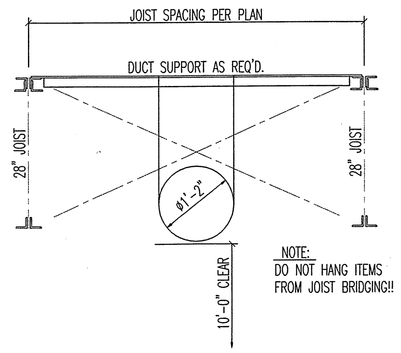

HANGING DUCTS 1
SCALE: ¾" = 1'-0" S8

NOT USED 2
SCALE: ¾" = 1'-0" S8

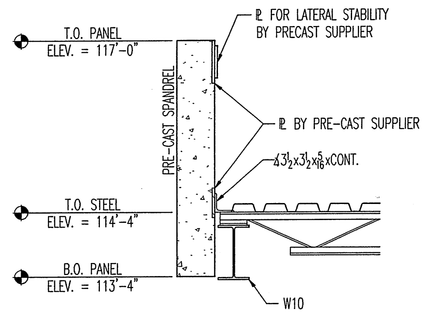

SECTION @ OPENING 3
SCALE: ¾" = 1'-0" S8

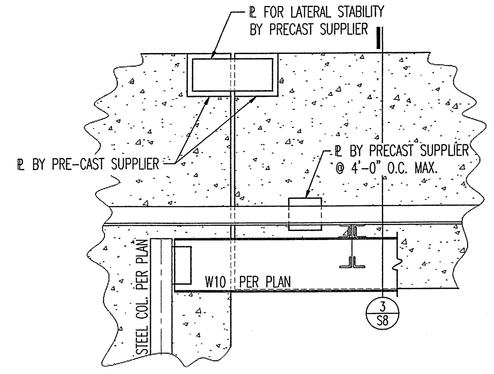

ELEV. @ SPANDREL 4
SCALE: ¾" = 1'-0" S8

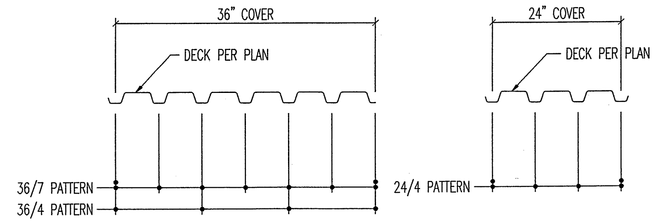

FASTEN SIDELAPS BETWEEN SUPPORTS WITH #10 TEK FASTENERS

DECK FASTENER LAYOUTS

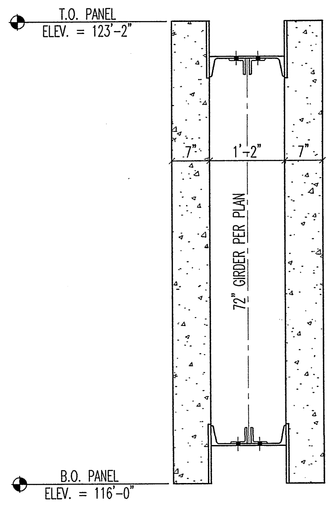

SECTION @ ENTRANCE SPANDREL 5
SCALE: ¾" = 1'-0" S8

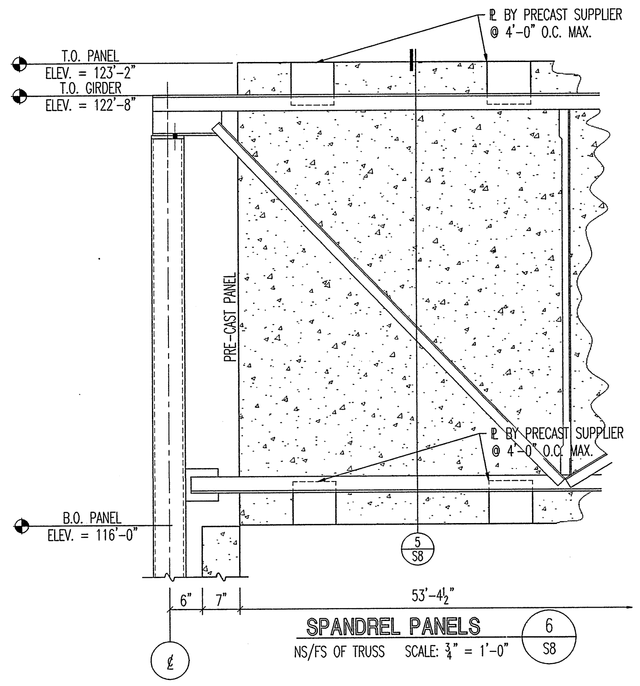

SPANDREL PANELS 6
NS/FS OF TRUSS SCALE: ¾" = 1'-0" S8

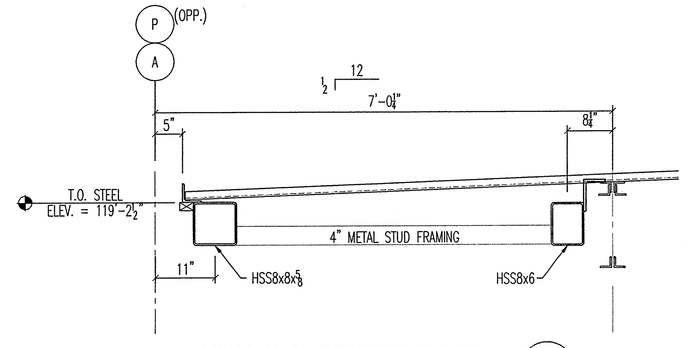

SECTION AT DECK OVERHANG 7
SCALE: ¾" = 1'-0" S8

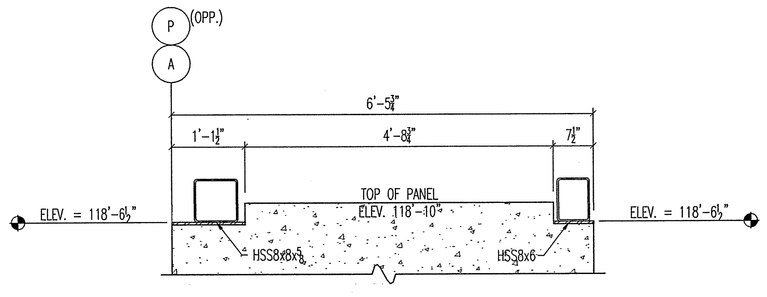

SECTION AT DECK OVERHANG 8
SCALE: ¾" = 1'-0" S8

RECEIVED
MAY 08 2006
INTEGRA CONSTRUCTION, INC.

S&W
Stevens&Wilkinson
STEVENS & WILKINSON STANG & NEWDOW, INC.
ARCHITECTURE ENGINEERING INTERIORS
100 PEACHTREE STREET NW, SUITE 2500
ATLANTA, GA 30303
P 404.522.8888
F 404.521.6204
WWW.SW-SN.COM

idea|span
linking knowledge and design
A STEVENS & WILKINSON COMPANY
100 PEACHTREE STREET NW, SUITE 2400
ATLANTA, GA 30303
P 404.522.8899
F 404.521.6343
www.idea-span.com

NEEDHAM CONSULTING ENGINEERS
FORT WAYNE
9921 Dupont Circle Drive W – Suite 203
Fort Wayne, Indiana 46825
Phone: 260/497-8400 Fax: 260/497-8414
KANSAS CITY
8417 Santa Fe Drive – Suite 200
Overland Park, Kansas 66212-2727
Phone: 913/385-5300 Fax: 913/385-0978
www.needhamcompanies.com / info@needhamcompanies.com

COLORADO REGISTERED TODD A. HILL 38477 PROFESSIONAL ENGINEER

MAY 08 2006

■ SUBMITTALS

DATE	DESCRIPTION
04.26.06	RELEASE ON PRECAST
05.08.06	FOR PRICING/PERMIT

■ REVISIONS

DATE	DESCRIPTION

■ APPROVED FOR CONSTRUCTION
□ NOT APPROVED FOR CONSTRUCTION

THIS DRAWING IS THE PROPERTY OF STEVENS & WILKINSON STANG & NEWDOW, INC. UNAUTHORIZED USE OF ANY KIND, INCLUDING USE ON OTHER PROJECT IS PROHIBITED.
© STEVENS & WILKINSON STANG & NEWDOW, INC.

■ PROJECT NUMBER: 06041.00
■ DATE: 04.05.06
■ FILE: F: /PROJECTS/06041.00/DESIGN

cingular WIRELESS
PUEBLO, COLORADO

Framing Details

S8

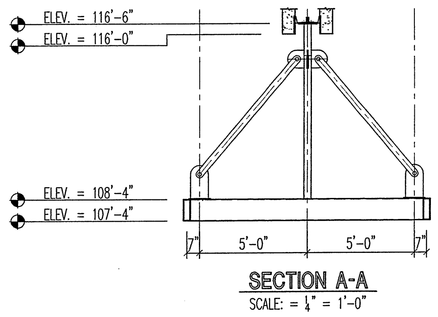

SECTION A-A
SCALE: = ¼" = 1'-0"

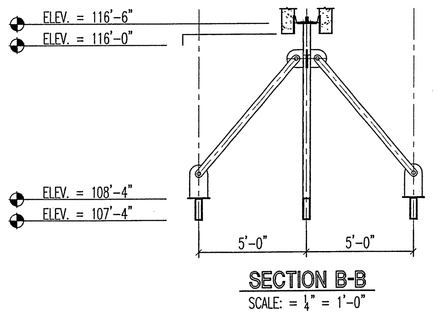

SECTION B-B
SCALE: = ¼" = 1'-0"

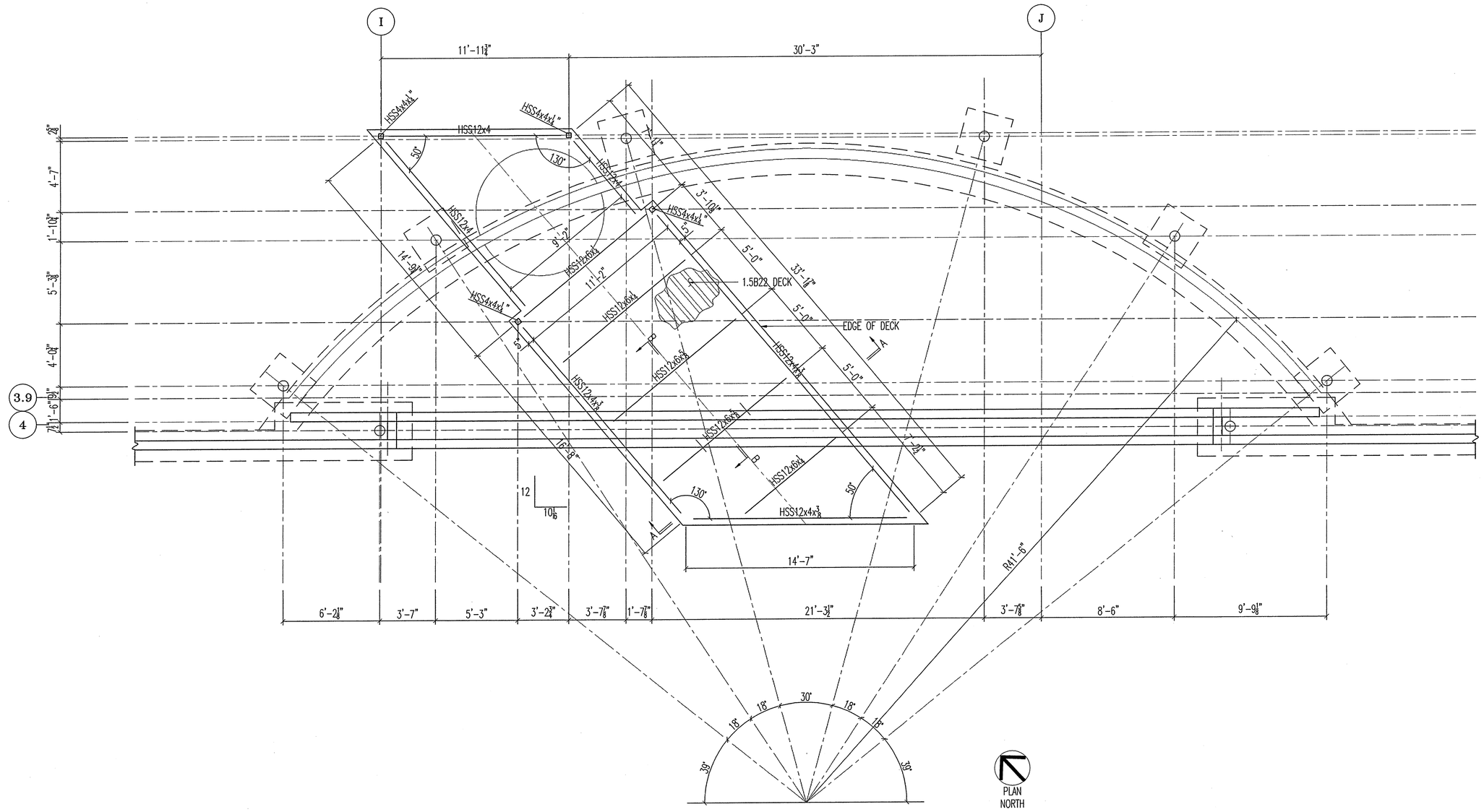

CANOPY FRAMING PLAN (1/S9)
SCALE: ¼" = 1'-0"

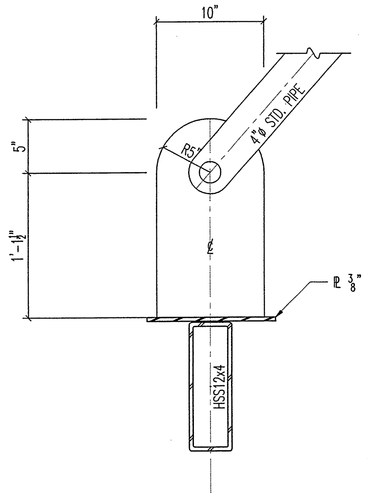

DETAIL (2/S9)
SCALE: 1½" = 1'-0"

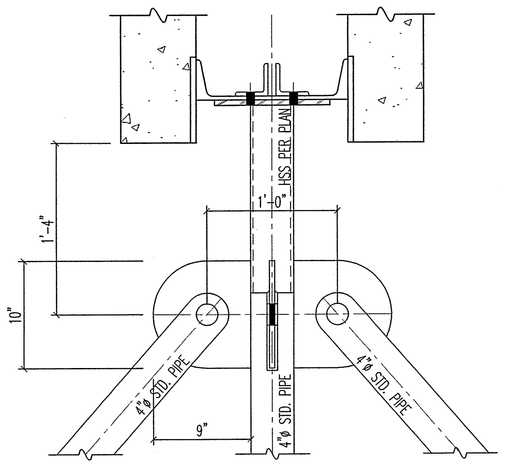

DETAIL (3/S9)
SCALE: 1½" = 1'-0"

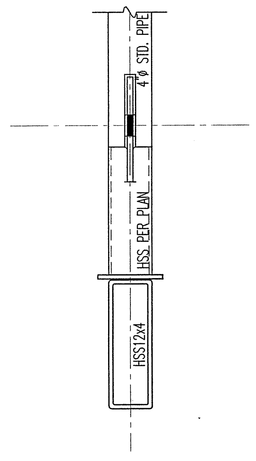

DETAIL (4/S9)
SCALE: 1½" = 1'-0"

RECEIVED
MAY 0 9 2006
INTEGRA CONSTRUCTION, INC

S&W
Stevens&Wilkinson
STEVENS & WILKINSON STANG & NEWDOW, INC.
ARCHITECTURE ENGINEERING INTERIORS
100 PEACHTREE STREET NW, SUITE 2500
ATLANTA, GA 30303
P 404.522.8888
F 404.521.6204
WWW.SW-SN.COM

idea|span
linking knowledge and design
A STEVENS & WILKINSON COMPANY
100 PEACHTREE STREET NW, SUITE 2400
ATLANTA, GA 30303
P 404.522.8899
F 404.521.6343
www.idea-span.com

NEEDHAM
CONSULTING ENGINEERS
FORT WAYNE
9921 Dupont Circle Drive W – Suite 203
Fort Wayne, Indiana 46825
Phone: 260/497-8400 Fax: 260/497-8414
KANSAS CITY
8417 Santa Fe Drive – Suite 200
Overland Park, Kansas 66212-2727
Phone: 913/385-5300 Fax: 913/385-0978
www.needhamcompanies.com / info@needhamcompanies.com

COLORADO REGISTERED
TODD A. WINE
38477
PROFESSIONAL ENGINEER

MAY 0 8 2006

■ SUBMITTALS

DATE	DESCRIPTION
04.26.06	RELEASE ON PRECAST
05.08.06	FOR PRICING/PERMIT

■ REVISIONS

DATE	DESCRIPTION

■ APPROVED FOR CONSTRUCTION
□ NOT APPROVED FOR CONSTRUCTION

THIS DRAWING IS THE PROPERTY OF STEVENS & WILKINSON STANG & NEWDOW, INC. UNAUTHORIZED USE OF ANY KIND, INCLUDING USE ON OTHER PROJECT IS PROHIBITED.
© STEVENS & WILKINSON STANG & NEWDOW, INC.

■ PROJECT NUMBER: 06041.00
■ DATE: 04.05.06
■ FILE: F:/PROJECTS/06041.00/DESIGN

cingular WIRELESS
PUEBLO, COLORADO

ENLARGED CANOPY FRAMING PLAN

S9

PLUMBING LEGEND

SYMBOL	ABBREV.	DESCRIPTION
	SWRW	S.,W. OR R.W. ABOVE FL. OR GRADE
	SWRW	S.,W. OR R.W. BELOW FL. OR GRADE
	V	VENT PIPING
	CW	COLD WATER PIPING
	HW	HOT WATER PIPING
	HWC	HOT WATER CIRCULATING PIPING
	CO	CLEANOUT
	GV	GATE VALVE
	UN	UNION
FD ⊠ FD	FD/KD	FLOOR DRAIN / KITCHEN DRAIN
	HD	HUB DRAIN
RD ORD	RD	ROOF DRAIN (ABOVE) OR OVERFLOW ROOF DRAIN
	DS	DOWNSPOUT
	NFHB	NON FREEZE HOSE BIBB
	SA	SHOCK ABSORBER
SA-"A"		SHOCK ABSORBER WITH PDI SIZE
	BP	BACKFLOW PREVENTER
	WHYD	WALL HYDRANT
		SLEEVE
	VB	VACUUM BREAKER
	CI	CAST IRON
	T.R.	THROUGH ROOF
	ABV	ABOVE
	CLG	CEILING
	FL	FLOOR
	DN	DOWN
	INV.	INVERT ELEVATION
G	G	GAS PIPING
TPS	T.P.S.	TRAP PRIMER SUPPLY
TPV	T.P.V.	TRAP PRIMER VALVE
(SIM.)	S.I.M.	SIMILAR LAYOUT
(O.H.)	O.H.	OPPOSITE HAND LAYOUT
T	T	TEMPERED WATER
RWO	RWO	RAINWATER OVERFLOW
⊠ ERD	ERD	EQUIPMENT ROOM DRAIN
AW	AW	ACID RESISTANT WASTE
ARCO	A.R.C.O.	ACID RESISTANT CLEANOUT
AV	AV	ACID RESISTANT VENT
	BCV	BALANCE CONTROL VALVE
	CTE	CONNECT TO EXISTING
1		NATURAL GAS REGULATOR

PLUMBING GENERAL NOTES:

1. ALL UTILITIES ARE SHOWN IN APPROXIMATE LOCATIONS ONLY. VERIFY EXACT LOCATIONS AND ELEVATIONS IN FIELD PRIOR TO PERFORMING ANY WORK.
2. PROVIDE ACCESS PANELS IN CEILINGS, CHASES OR WALLS WHEREVER NECESSARY TO AFFORD ACCESS TO VALVES, CLEANOUTS AND ALL EQUIPMENT AND ACCESSORIES REQUIRING SERVICE. COORDINATE WITH ALL OTHER TRADES AND THE ARCHITECTURAL DRAWINGS. NOTIFY (IN WRITING) THE ARCHITECT PRIOR TO THE INSTALLATION OF ACCESS DOORS TO ASSURE COMPATABLE LOCATIONS. FIRE RATINGS OF ACCESS DOORS AND FRAMES SHALL MATCH THAT OF THE AREA WHERE INSTALLED. MAINTAIN FIRE RATING AT ALL RATED MEMBERS.
3. PROVIDE SLEEVES FOR ALL PIPE PENETRATIONS THRU WALLS & FLOORS. MAINTAIN FIRE RATING AT ALL RATED MEMBERS.
4. THE PURPOSE OF THESE DRAWINGS IS TO INDICATE EQUIPMENT ARRANGEMENTS AND LOCATIONS. THE CONTRACTOR SHALL MAKE ALLOWANCES FOR FITTINGS, TRIM, ACCESSORIES, EQUIPMENT, SHOP DRAWINGS AND DIMENSIONS.
5. CONTRACTOR SHALL COORDINATE ALL PIPING CROSSING EXPANSION JOINTS AS INDICATED ON THE STRUCTURAL DRAWINGS AND MAKE PROVISIONS FOR THE ABSORPTION OF PIPE MOVEMENTS BY THE INSTALLATION OF EXPANSION JOINTS.
6. CONTRACTOR SHALL COORDINATE ALL PIPING, FIXTURE AND EQUIPMENT LOCATIONS WITH HVAC DUCTWORK, ELECTRICAL FIXTURES, CASEWORK AND ALL STRUCTURAL CONDITIONS PRIOR TO INSTALLATION.
7. PRIOR TO COMMENCEMENT, THE CONTRACTOR SHALL COORDINATE UNDERGROUND SANITARY WASTE AND STORM DRAINAGE PIPING WITH UNDERSLAB FOUNDATIONS, DRAINAGE SYSTEM AND UNDERGROUND ELECTRICAL.

FIXTURE SCHEDULE

NO.	DESCRIPTION	W.	C.W.	H.W.	REMARKS
F-1	WATER CLOSET - WALL HUNG	4"	1"	-	
F-1H	WATER CLOSET - WALL HUNG - HC ACCESSIBLE	4"	1"	-	
F-2	URINAL	2"	¾"	-	
F-2H	URINAL - HC ACCESSIBLE	2"	¾"	-	
F-3	LAVATORY - COUNTERTOP	1¼"	½"	½"	
F-3H	LAVATORY, HC ACCESSIBLE - COUNTERTOP	1¼"	½"	½"	
F-4	EWC, HI/LOW - SURFACE MOUNTED	1¼"	½"	-	
F-5	SERVICE SINK	3"	½"	½"	
F-6	LAVATORY - WALL HUNG	1¼"	½"	½"	
F-7	SINK - PANTRY, NEW MOM'S & HAND SINK	1½"	½"	½"	

SHOCK ABSORBER SCHEDULE

ABSORBOTRON TYPE NO.	5005	5010	5020	5030	5040	5050
P.D.I. SYMBOLS	A	B	C	D	E	F
FIXTURE-UNIT RATING	1-11	12-32	33-60	61-113	114-154	155-330

NOTE: SMITH NUMBERS SHOWN, EQUAL - JOSAM, ZURN OR JONES.

RECEIVED
MAY 08 2006
INTEGRA CONSTRUCTION, INC.

S&W

Stevens&Wilkinson
STEVENS & WILKINSON STANG & NEWDOW, INC.
ARCHITECTURE ENGINEERING INTERIORS

100 PEACHTREE STREET NW, SUITE 2500
ATLANTA, GA 30303
P 404.522.8888
F 404.521.6204
WWW.SW-SN.COM

idea|span
linking knowledge and design
A STEVENS & WILKINSON COMPANY

100 PEACHTREE STREET NW, SUITE 2400
ATLANTA, GA 30303
P 404.522.8899
F 404.521.6343
www.idea-span.com

■ SUBMITTALS

DATE	DESCRIPTION
05.08.06	PRICING / PERMIT SET

■ REVISIONS

DATE	DESCRIPTION

□ APPROVED FOR CONSTRUCTION
■ NOT APPROVED FOR CONSTRUCTION

THIS DRAWING IS THE PROPERTY OF STEVENS & WILKINSON STANG & NEWDOW, INC. UNAUTHORIZED USE OF ANY KIND, INCLUDING USE ON OTHER PROJECT IS PROHIBITED.

© STEVENS & WILKINSON STANG & NEWDOW, INC.

■ PROJECT NUMBER: 06041.00
■ DATE: 05.08.06
■ FILE: F:/PROJECTS/06041.00/DESIGN

cingular WIRELESS

PUEBLO, COLORADO

PLUMBING GENERAL NOTES, LEGEND, AND SCHEDULES

P1.0

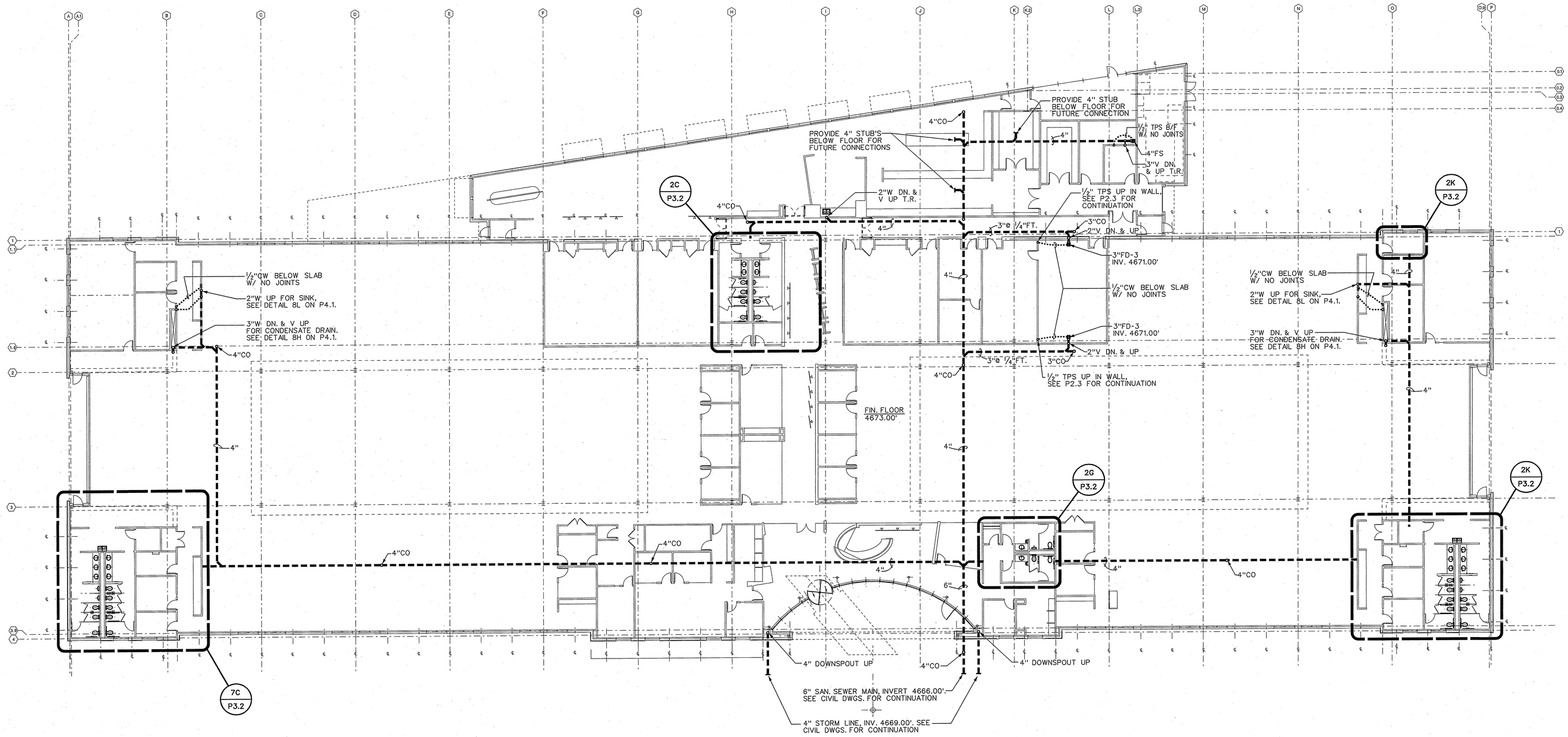

PLUMBING FLOOR PLAN 5F

Scale: 1/16"=1'-0"

RECEIVED
MAY 0 8 2006
INTEGRA CONSTRUCTION, INC.

S&W

Stevens&Wilkinson
STEVENS & WILKINSON STANG & NEWDOW, INC.
ARCHITECTURE ENGINEERING INTERIORS

100 PEACHTREE STREET NW, SUITE 2500
ATLANTA, GA 30303
P 404.522.8888
F 404.521.6204
WWW.SW-SN.COM

idea|span
linking knowledge and design

A STEVENS & WILKINSON COMPANY

100 PEACHTREE STREET NW, SUITE 2400
ATLANTA, GA 30303
P 404.522.8899
F 404.521.6343
www.idea-span.com

COLORADO REGISTERED PROFESSIONAL ENGINEER
CARL RICHARD LATHAM
NO. 31923

■ SUBMITTALS

DATE	DESCRIPTION
05.08.06	PRICING / PERMIT SET

■ REVISIONS

DATE	DESCRIPTION

✕ APPROVED FOR CONSTRUCTION
☐ NOT APPROVED FOR CONSTRUCTION

THIS DRAWING IS THE PROPERTY OF STEVENS & WILKINSON STANG & NEWDOW, INC. UNAUTHORIZED USE OF ANY KIND, INCLUDING USE ON OTHER PROJECT IS PROHIBITED.

© STEVENS & WILKINSON STANG & NEWDOW, INC.

■ PROJECT NUMBER: 06041.00
■ DATE: 05.08.06
■ FILE: F:/PROJECTS/06041.00/DESIGN

cingular WIRELESS

PUEBLO, COLORADO

PLUMBING FLOOR PLAN- UNDERGROUND PIPING

P2.1

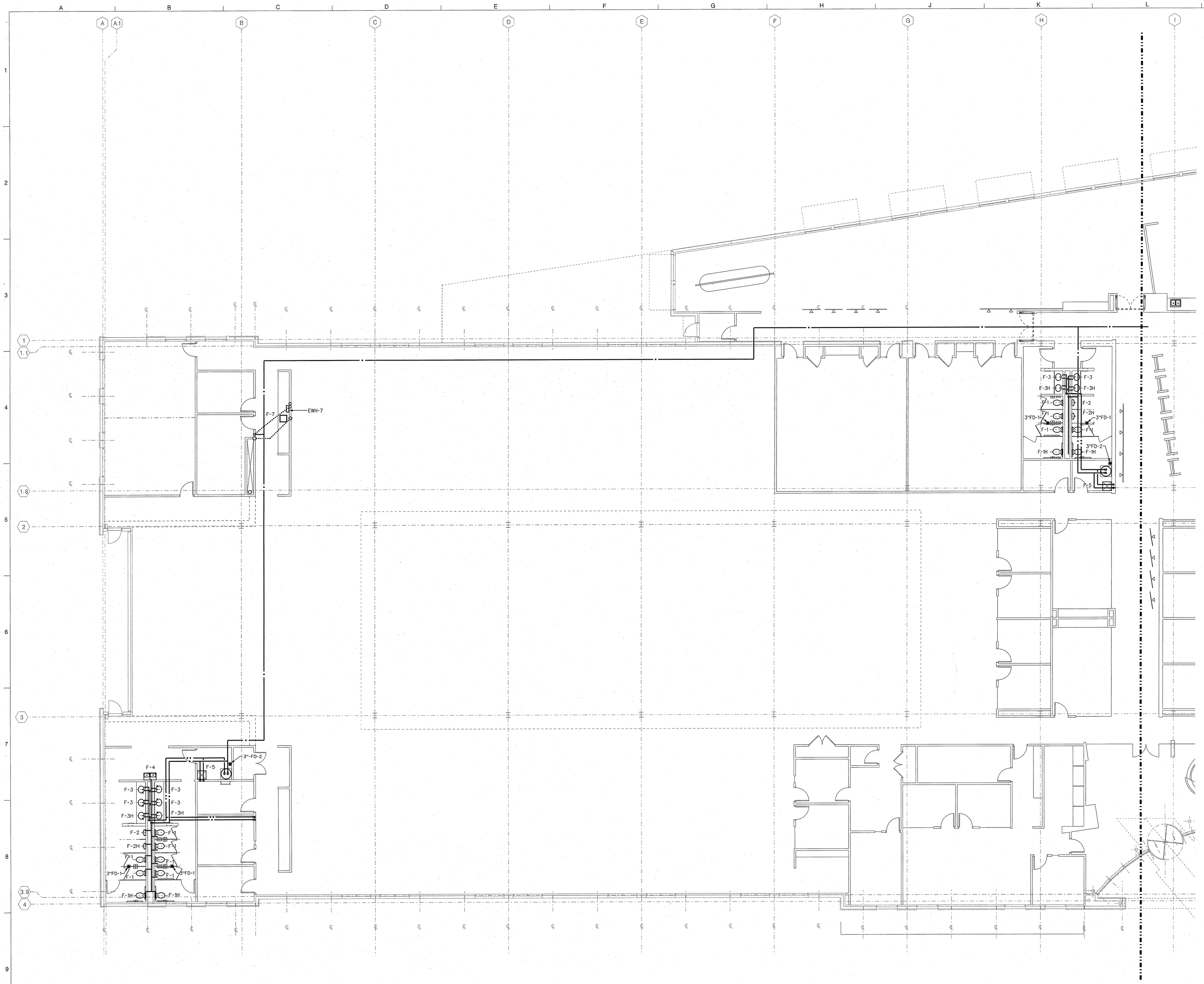

PLUMBING FLOOR PLAN – PART A (5F)

Scale: 1/8"=1'-0"

RECEIVED
MAY 09 2006
INTEGRA CONSTRUCTION, INC.

S&W

Stevens&Wilkinson
STEVENS & WILKINSON STANG & NEWDOW, INC.
ARCHITECTURE ENGINEERING INTERIORS

100 PEACHTREE STREET NW, SUITE 2500
ATLANTA, GA 30303
P 404.522.8888
F 404.521.6204
WWW.SW-SN.COM

idea|span
linking knowledge and design

A STEVENS & WILKINSON COMPANY

100 PEACHTREE STREET NW, SUITE 2400
ATLANTA, GA 30303
P 404.522.8899
F 404.521.6343
www.idea-span.com

■ SUBMITTALS

DATE	DESCRIPTION
05.08.06	PRICING / PERMIT SET

■ REVISIONS

DATE	DESCRIPTION

□ APPROVED FOR CONSTRUCTION
■ NOT APPROVED FOR CONSTRUCTION

THIS DRAWING IS THE PROPERTY OF STEVENS & WILKINSON STANG & NEWDOW, INC. UNAUTHORIZED USE OF ANY KIND, INCLUDING USE ON OTHER PROJECT IS PROHIBITED.

© STEVENS & WILKINSON STANG & NEWDOW, INC.

■ PROJECT NUMBER: 06041.00
■ DATE: 05.08.06
■ FILE: F:/PROJECTS/06041.00/DESIGN

cingular WIRELESS

PUEBLO, COLORADO

PLUMBING
FLOOR PLAN-
PART A

P2.2

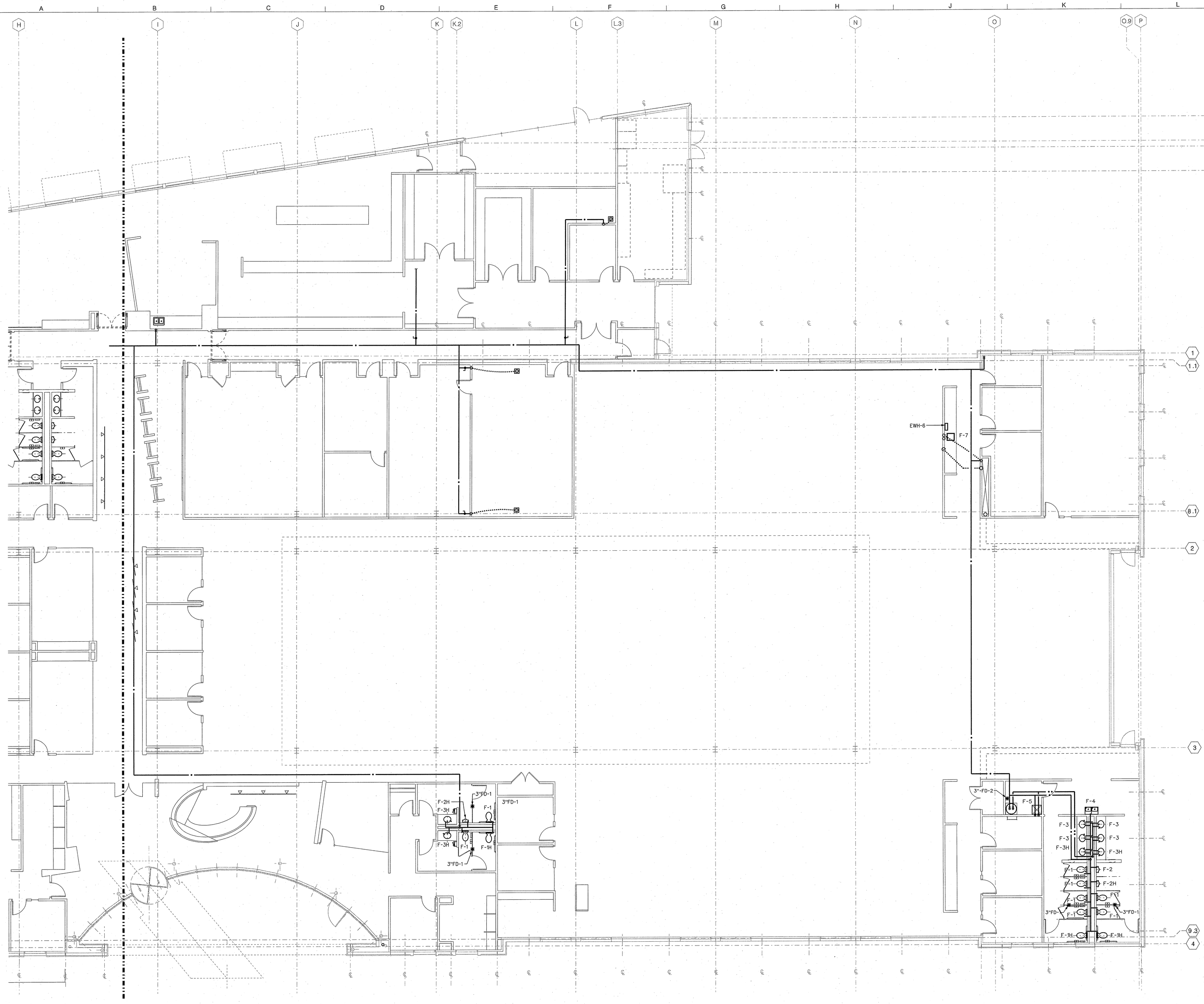

PLUMBING FLOOR PLAN – PART B

Scale: 1/8"=1'-0"

5F

RECEIVED
MAY 9 8 2006
INTEGRA CONSTRUCTION, INC.

S&W

Stevens&Wilkinson
STEVENS & WILKINSON STANG & NEWDOW, INC.
ARCHITECTURE ENGINEERING INTERIORS

100 PEACHTREE STREET NW, SUITE 2500
ATLANTA, GA 30303
P 404.522.8888
F 404.521.6204
WWW.SW-SN.COM

idea|span
linking knowledge and design

A STEVENS & WILKINSON COMPANY

100 PEACHTREE STREET NW, SUITE 2400
ATLANTA, GA 30303
P 404.522.8899
F 404.521.6343
www.idea-span.com

■ SUBMITTALS

DATE	DESCRIPTION
05.08.06	PRICING / PERMIT SET

■ REVISIONS

DATE	DESCRIPTION

□ APPROVED FOR CONSTRUCTION
■ NOT APPROVED FOR CONSTRUCTION

THIS DRAWING IS THE PROPERTY OF STEVENS & WILKINSON STANG & NEWDOW, INC. UNAUTHORIZED USE OF ANY KIND, INCLUDING USE ON OTHER PROJECT IS PROHIBITED.

©STEVENS & WILKINSON STANG & NEWDOW, INC.

■ PROJECT NUMBER: 06041.00
■ DATE: 05.08.06
■ FILE: F:/PROJECTS/06041.00/DESIGN

cingular WIRELESS

PUEBLO, COLORADO

PLUMBING
FLOOR PLAN-
PART B

P2.3

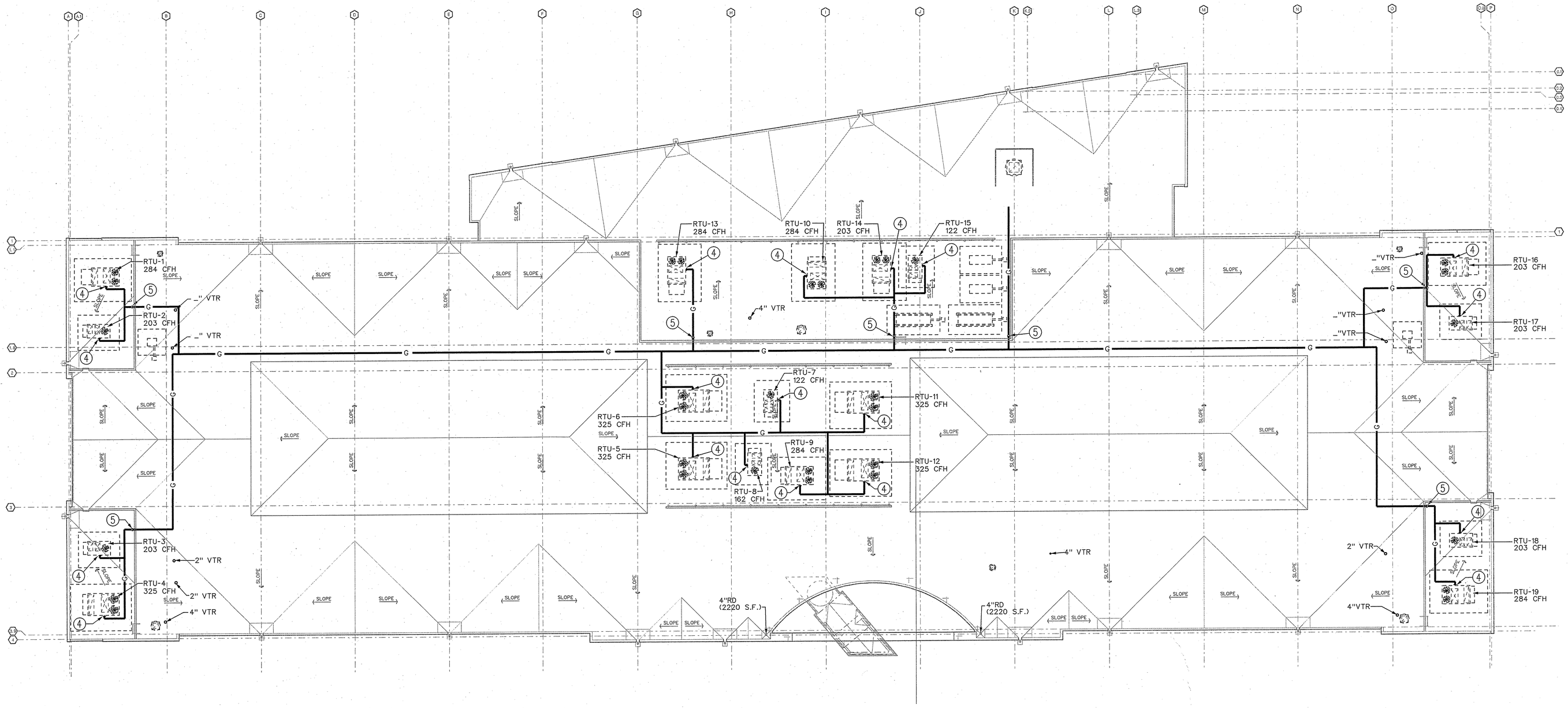

PLUMBING ROOF PLAN

Scale: 1/16"=1'-0"

5F

GENERAL NOTES (THIS SHEET ONLY)

1. SEE ARCHITECTURAL DRAWING FOR ROOF DRAIN DETAILS.
2. ¾" HOSE BIBB W/ VACUUM BREAKER. SEE SHEET P2.2 FOR SUPPLY, AND DETAIL 10F ON P4.1.
3. ¾" HOSE BIBB W/ VACUUM BREAKER. SEE SHEET P2.3 FOR SUPPLY, AND DETAIL 10F ON P4.1.
4. GAS CONNECTION TO ROOFTOP UNIT. SEE DETAIL 2E ON P4.1.
5. GAS DOWN TO LOWER ROOF LEVEL.

GAS PIPE SUPPORT REQUIREMENTS

1. GAS PIPE SUPPORT TO BE MIRO INDUSTRIES MODEL 1.5 AND 3-R SUPPORTS. PROVIDE STACKING SPACERS FOR ELEVATION CHANGES. SECURE PIPE WITH STAINLESS STEEL STRAPS & SCREWS.
2. PROVIDE PIPE SUPPORT WITHIN 1'-0" OF EACH TEE CONNECTION, 90° HORZ. ELBOW, AND AT EACH PIPE DROP OR RISE.
3. PROVIDE PIPE SUPPORTS AT THE FOLLOWING SPACING LIMITS:
   6'-0" ON CENTER FOR ½" PIPE
   8'-0" ON CENTER FOR ¾" & 1" PIPE
   10'-0" ON CENTER FOR 1 ¼" & LARGER PIPE

RECEIVED
MAY 08 2006
INTEGRA CONSTRUCTION, INC.

S&W
Stevens&Wilkinson
STEVENS & WILKINSON STANG & NEWDOW, INC.
ARCHITECTURE ENGINEERING INTERIORS
100 PEACHTREE STREET NW, SUITE 2500
ATLANTA, GA 30303
P 404.522.8888
F 404.521.6204
WWW.SW-SN.COM

idea|span
linking knowledge and design
A STEVENS & WILKINSON COMPANY
100 PEACHTREE STREET NW, SUITE 2400
ATLANTA, GA 30303
P 404.522.8899
F 404.521.6343
www.idea-span.com

■ SUBMITTALS

DATE	DESCRIPTION
05.08.06	PRICING / PERMIT SET

■ REVISIONS

DATE	DESCRIPTION

□ APPROVED FOR CONSTRUCTION
■ NOT APPROVED FOR CONSTRUCTION

THIS DRAWING IS THE PROPERTY OF STEVENS & WILKINSON STANG & NEWDOW, INC. UNAUTHORIZED USE OF ANY KIND, INCLUDING USE ON OTHER PROJECT IS PROHIBITED.
©STEVENS & WILKINSON STANG & NEWDOW, INC.

■ PROJECT NUMBER: 06041.00
■ DATE: 05.08.06
■ FILE: P:/PROJECTS/06041.00/DESIGN

cingular WIRELESS
PUEBLO, COLORADO

PLUMBING ROOF PLAN

P3.1

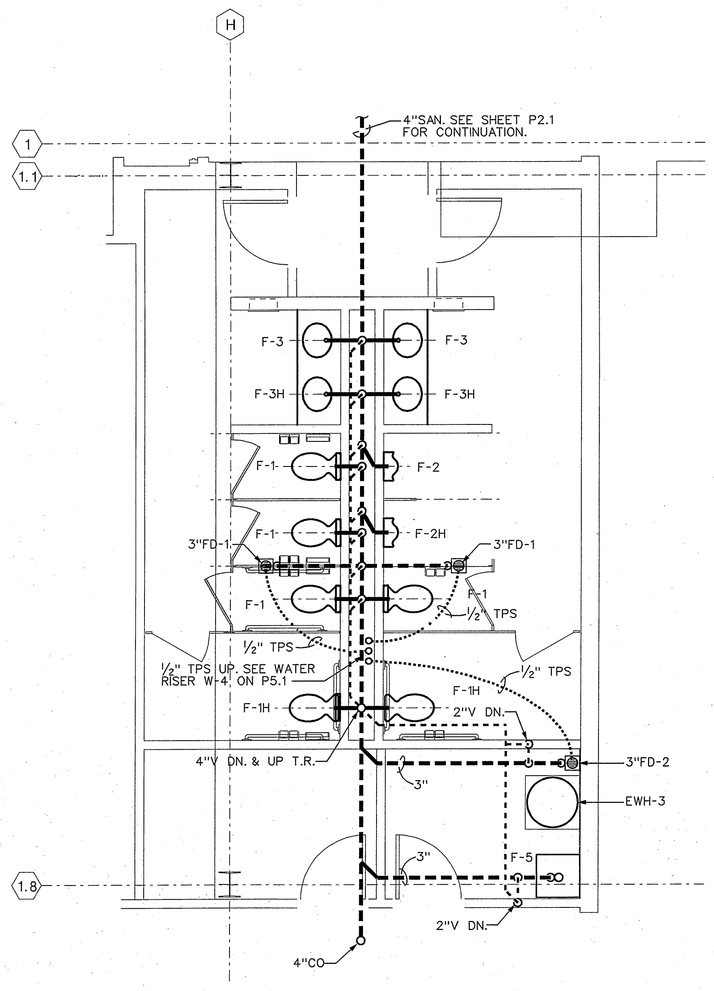

SEE RISER S-4 ON P5.1 FOR ADDITIONAL PIPE SIZES

TOILET PART PLAN 2C

Scale: 1/4" = 1'- 0"

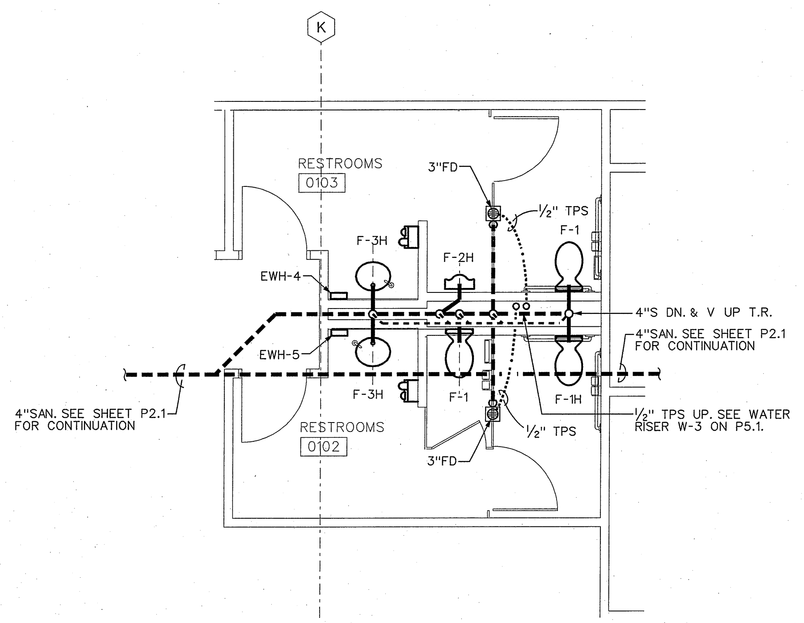

SEE RISER S-3 ON P5.1 FOR ADDITIONAL PIPE SIZES

TOILET PART PLAN 2G

Scale: 1/4" = 1'- 0"

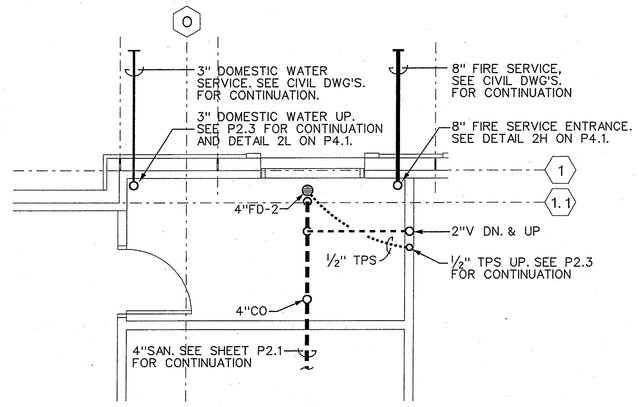

PLUMBING PART PLAN 2K

Scale: 1/4" = 1'- 0"

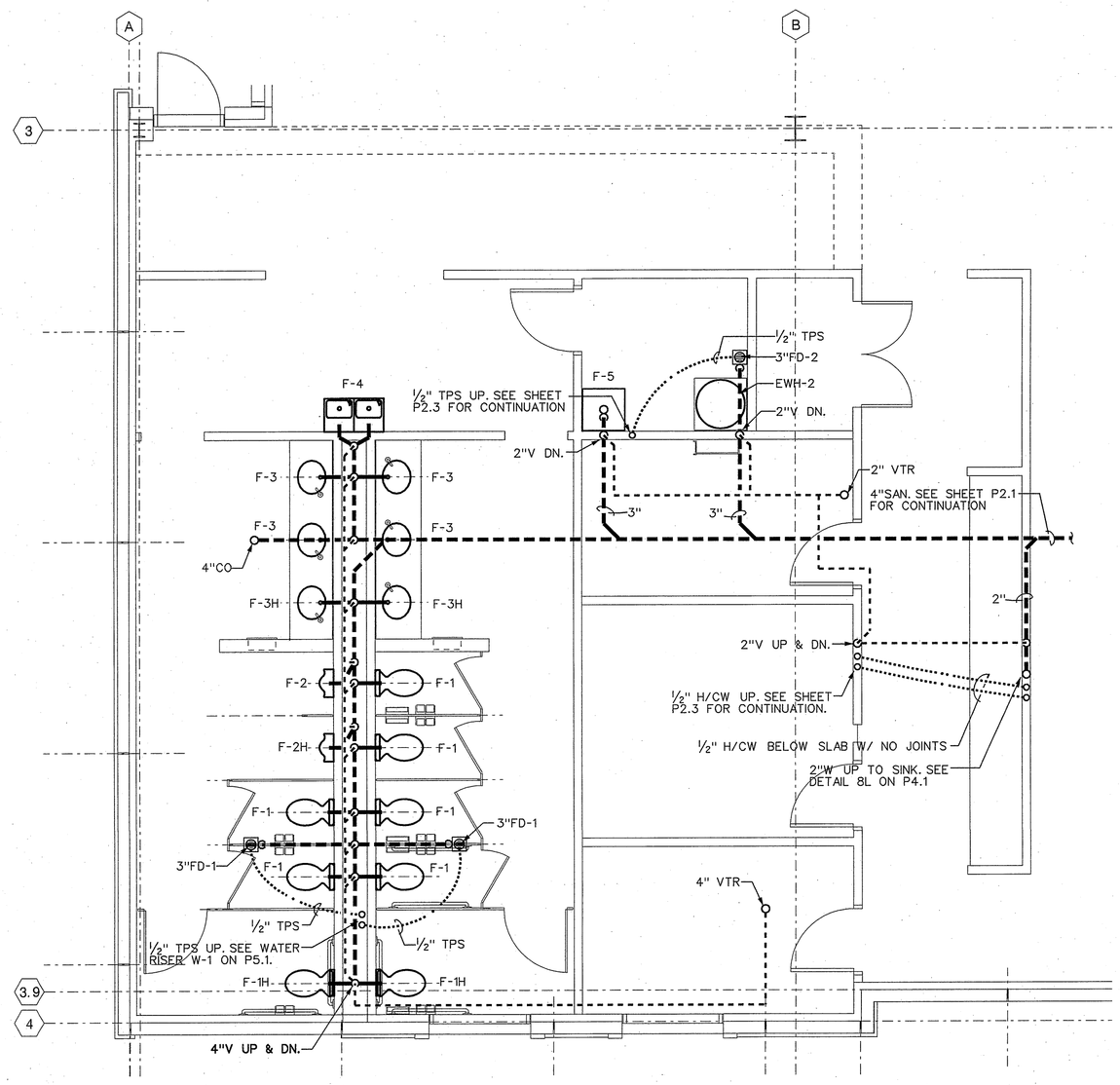

SEE RISER S-2 ON P5.1 FOR ADDITIONAL PIPE SIZES

TOILET PART PLAN 7C

Scale: 1/4" = 1'- 0"

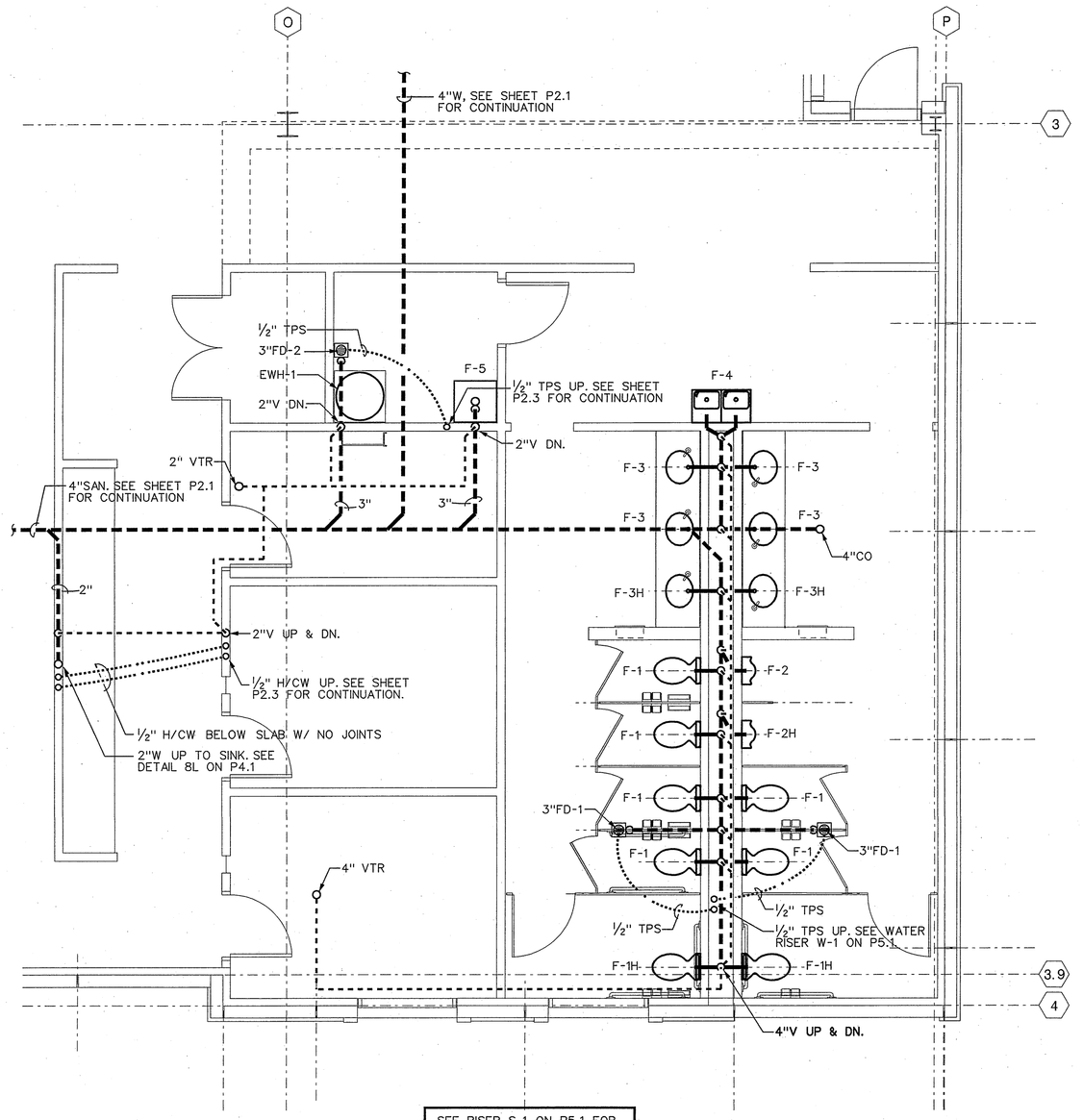

SEE RISER S-1 ON P5.1 FOR ADDITIONAL PIPE SIZES

TOILET PART PLAN 7K

Scale: 1/4" = 1'- 0"

RECEIVED
MAY 08 2006
INTEGRA CONSTRUCTION, INC.

Stevens&Wilkinson
STEVENS & WILKINSON STANG & NEWDOW, INC.
ARCHITECTURE ENGINEERING INTERIORS
100 PEACHTREE STREET NW, SUITE 2500
ATLANTA, GA 30303
P 404.522.8888
F 404.521.6204
WWW.SW-SN.COM

idea|span
linking knowledge and design
A STEVENS & WILKINSON COMPANY
100 PEACHTREE STREET NW, SUITE 2400
ATLANTA, GA 30303
P 404.522.8899
F 404.521.6343
www.idea-span.com

COLORADO REGISTERED
CARL RICHARD LATHAM
NO. 31923
PROFESSIONAL ENGINEER

■ SUBMITTALS

DATE	DESCRIPTION
05.08.06	PRICING / PERMIT SET

■ REVISIONS

DATE	DESCRIPTION

☒ APPROVED FOR CONSTRUCTION
☐ NOT APPROVED FOR CONSTRUCTION

THIS DRAWING IS THE PROPERTY OF STEVENS & WILKINSON STANG & NEWDOW, INC. UNAUTHORIZED USE OF ANY KIND, INCLUDING USE ON OTHER PROJECT IS PROHIBITED.
© STEVENS & WILKINSON STANG & NEWDOW, INC.

■ PROJECT NUMBER: 06041.00
■ DATE: 05.08.06
■ FILE: F:/PROJECTS/06041.00/DESIGN

cingular WIRELESS
PUEBLO, COLORADO

PLUMBING PART PLANS

P3.2

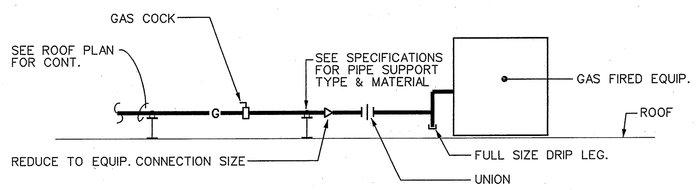

RTU GAS SUPPLY DETAIL 2E
NOT TO SCALE

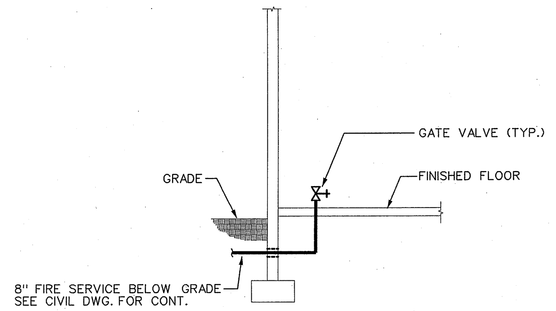

WATER SERVICE ENTRANCE DETAIL-FIRE SERVICE 2H
NOT TO SCALE

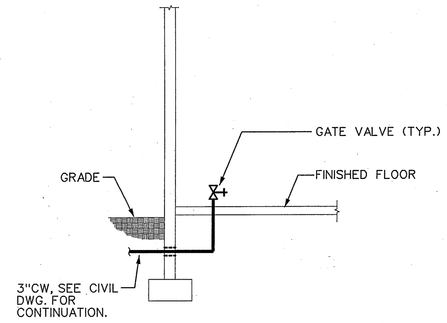

WATER SERVICE ENTRANCE DETAIL-DOMESTIC 2L
NOT TO SCALE

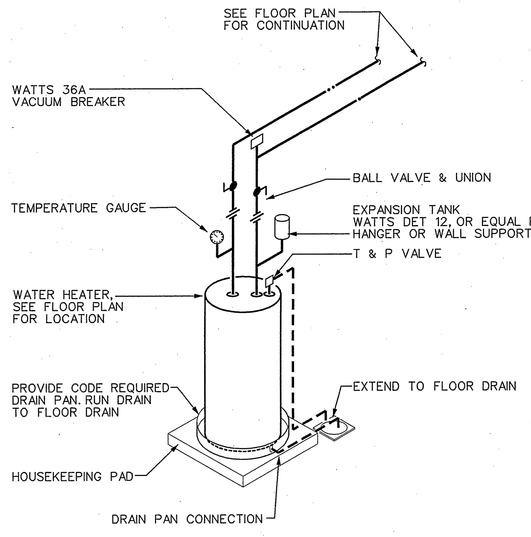

WATER HEATER DETAIL 5B
NOT TO SCALE (EWH-__, __)

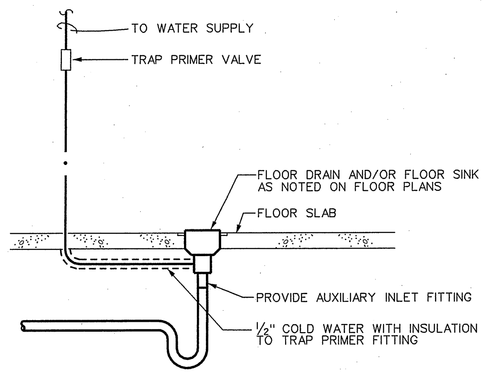

TRAP PRIMER DETAIL 5H
NOT TO SCALE

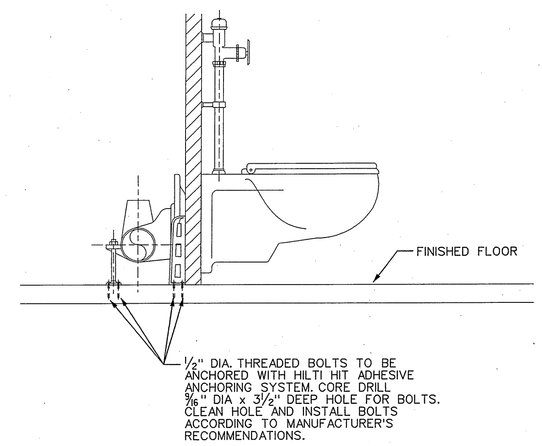

WATER CLOSET SUPPORT DETAIL 5L
NOT TO SCALE

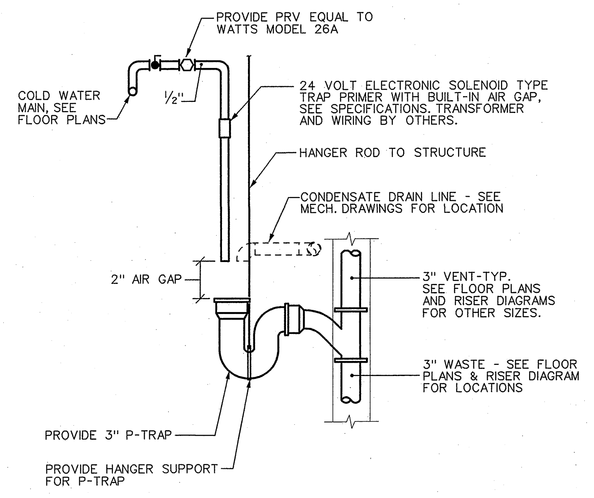

TYPICAL CONDENSATE RECEIVER DETAIL 8H
NOT TO SCALE

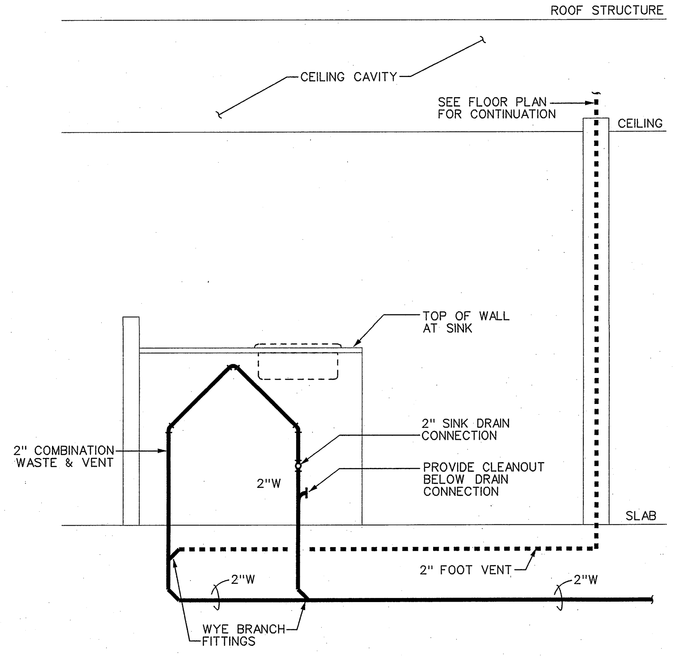

NOTE:
ISLAND VENT TO BE INSTALLED PER 2003 UNIFORM PLUMBING CODE.

ISLAND VENT DETAIL 8L
NOT TO SCALE

RECEIVED
MAY 0 9 2006
INTEGRA CONSTRUCTION, INC.

S&W

Stevens&Wilkinson
STEVENS & WILKINSON STANG & NEWDOW, INC.
ARCHITECTURE ENGINEERING INTERIORS

100 PEACHTREE STREET NW, SUITE 2500
ATLANTA, GA 30303
P 404.522.8888
F 404.521.6204
WWW.SW-SN.COM

idea|span
linking knowledge and design

A STEVENS & WILKINSON COMPANY

100 PEACHTREE STREET NW, SUITE 2400
ATLANTA, GA 30303
P 404.522.8899
F 404.521.6343
www.idea-span.com

■ SUBMITTALS

DATE	DESCRIPTION
05.08.06	PRICING / PERMIT SET

■ REVISIONS

DATE	DESCRIPTION

□ APPROVED FOR CONSTRUCTION
■ NOT APPROVED FOR CONSTRUCTION

THIS DRAWING IS THE PROPERTY OF STEVENS & WILKINSON STANG & NEWDOW, INC. UNAUTHORIZED USE OF ANY KIND, INCLUDING USE ON OTHER PROJECT IS PROHIBITED.

© STEVENS & WILKINSON STANG & NEWDOW, INC.

■ PROJECT NUMBER: 06041.00
■ DATE: 05.08.06
■ FILE: F:/PROJECTS/06041.00/DESIGN

cingular WIRELESS
PUEBLO, COLORADO

PLUMBING DETAILS

P4.1

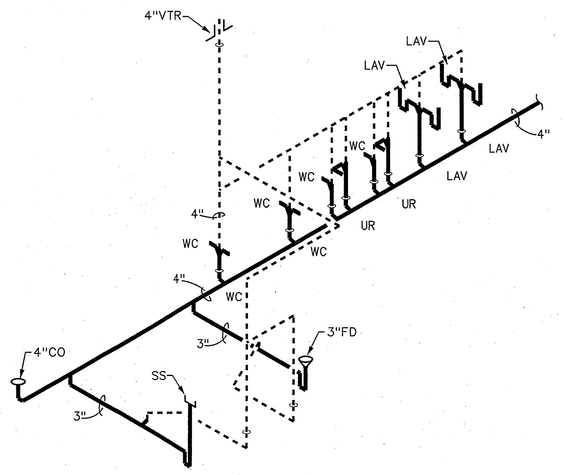

WASTE RISER DIAGRAM (S-4)
NOT TO SCALE

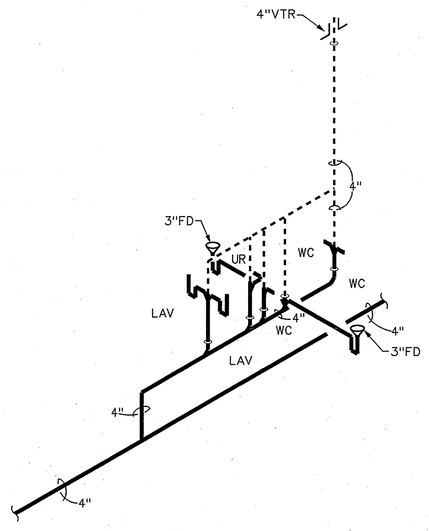

WASTE RISER DIAGRAM (S-3)
NOT TO SCALE

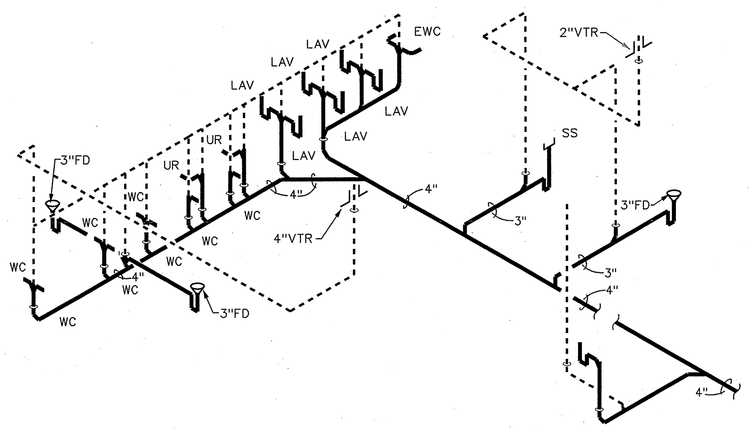

WASTE RISER DIAGRAM (S-2)
NOT TO SCALE

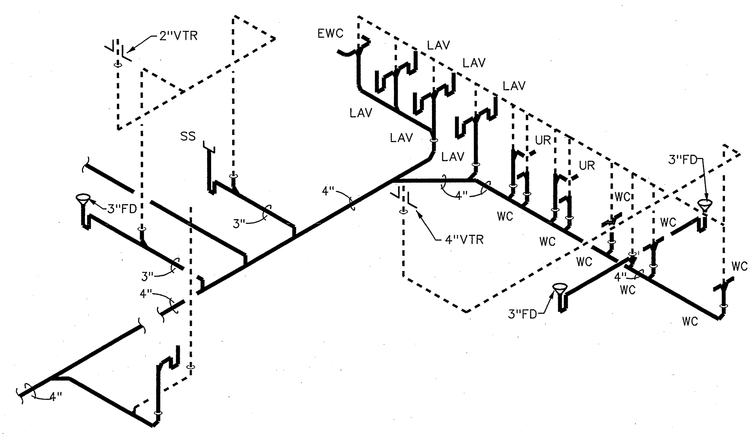

WASTE RISER DIAGRAM (S-1)
NOT TO SCALE

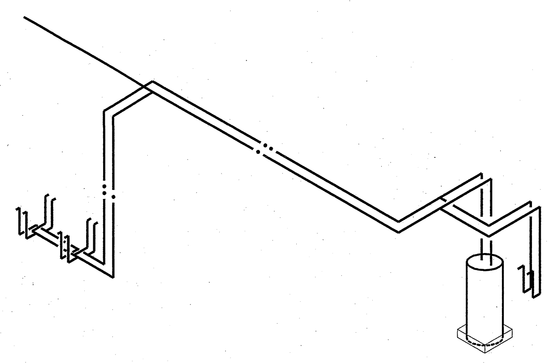

WATER RISER DIAGRAM (W-4)
NOT TO SCALE

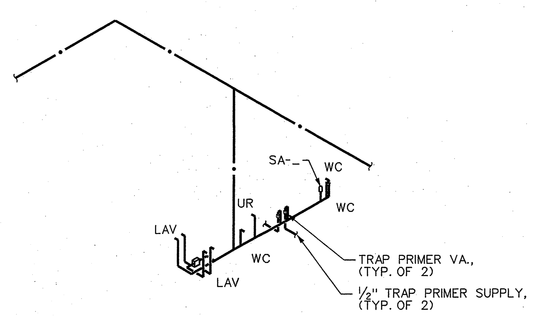

WATER RISER DIAGRAM (W-3)
NOT TO SCALE

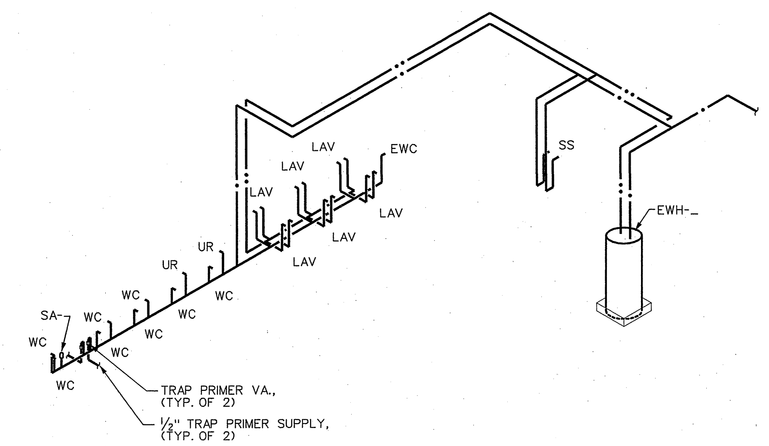

WATER RISER DIAGRAM (W-2)
NOT TO SCALE

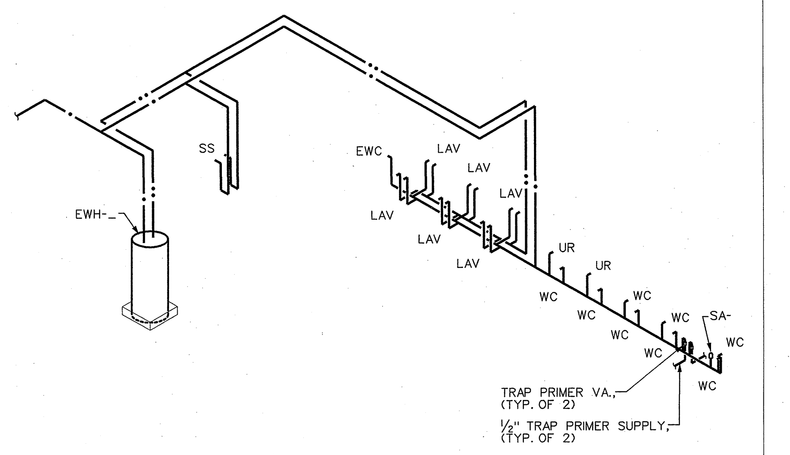

WATER RISER DIAGRAM (W-1)
NOT TO SCALE

RECEIVED
MAY 03 2006
INTEGRA CONSTRUCTION, INC.

S&W
Stevens&Wilkinson
STEVENS & WILKINSON STANG & NEWDOW, INC.
ARCHITECTURE ENGINEERING INTERIORS
100 PEACHTREE STREET NW, SUITE 2500
ATLANTA, GA 30303
P 404.522.8888
F 404.521.6204
WWW.SW-SN.COM

idea|span
linking knowledge and design
A STEVENS & WILKINSON COMPANY
100 PEACHTREE STREET NW, SUITE 2400
ATLANTA, GA 30303
P 404.522.8899
F 404.521.6343
www.idea-span.com

■ SUBMITTALS

DATE	DESCRIPTION
05.08.06	PRICING / PERMIT SET

■ REVISIONS

DATE	DESCRIPTION

□ APPROVED FOR CONSTRUCTION
■ NOT APPROVED FOR CONSTRUCTION

THIS DRAWING IS THE PROPERTY OF STEVENS & WILKINSON STANG & NEWDOW, INC. UNAUTHORIZED USE OF ANY KIND, INCLUDING USE ON OTHER PROJECT IS PROHIBITED.

©STEVENS & WILKINSON STANG & NEWDOW, INC.

■ PROJECT NUMBER: 06041.00
■ DATE: 05.08.06
■ FILE: F:/PROJECTS/06041.00/DESIGN

cingular WIRELESS
PUEBLO, COLORADO

PLUMBING RISER DIAGRAMS

P5.1

HVAC-SYMBOLS AND ABBREVIATIONS:

AIR MOVING DEVICES AND COMPONENTS

DUCT (1ST FIGURE, SIDE SHOWN. 2ND FIGURE, SIDE NOT SHOWN.) — 20X12 — 20X12

SUPPLY DUCT SECTION — 20X12

EXHAUST OR RETURN DUCT SECTION — 20X12

1" ACOUSTICALLY LINED DUCT (DIMENSION FOR NET FREE AREA INSIDE LINER) — 20X12

INCLINED RISE (R) OR DROP (D) RECTANGULAR DUCT (ARROW IN DIRECTION OF FLOW) — R

INCLINED RISE (R) OR DROP (D) ROUND DUCT (ARROW IN DIRECTION OF FLOW) — R

TRANSITION (LOW PRESSURE – 4:1 RATIO,MEDIUM & HIGH PRESSURE – 7:1 RATIO. NOTE FLAT ON TOP (FOT) OR FLAT ON BOTTOM (FOB) IF APPLICABLE.)

ELBOW TURNED UP

ELBOW TURNED DOWN

RADIUS TYPE ELBOW

SQUARE TYPE ELBOW WITH VANES

TURNING VANES (REQUIRED ON ALL DUCTS, SUPPLY, RETURN, AND EXHAUST)

DIVIDED FLOW FITTING (SEE DETAILS FOR DAMPERS REQUIRED) — 20X12 — 12X12 — 8X12

ACCESS DOOR (AD) OR ACCESS PANEL (AP) — 12X12 AP — 12X12 AD

SMOKE DAMPER (SD) OR FIRE DAMPER (FD) (WITH ACCESS PANEL) — FD WITH 12X12 AP — FD WITH 12X12 AP

MOTOR OPERATED DAMPER (MOD) (WITH ACCESS PANEL) — MOD WITH 12X12 AP — MOD WITH 12X12 AP

MANUAL VOLUME DAMPER (MVD)

MANUAL VOLUME DAMPER (MVD) WITH REMOTE OPERATOR

FLEXIBLE DUCT CONNECTION (FC)

DOOR GRILLE — 12X6 DG — OR — 8X6

UNDERCUT DOOR (U.C.) — *" U.C. — OR — U.C. *"

LOUVER AND BIRDSCREEN — LOUVER–36X24

DUCT SMOKE DETECTOR — D

FIRESTAT — F

ROOM THERMOSTAT OR SENSOR — T

ROUND CEILING DIFFUSER — DIFFUSER, GRILLE & REGISTER TYPE – SEE SCHEDULES — A–12"–400 — A–12"–400 — NECK SIZE — AIR QUANTITY IN CFM — OPEN QUADRANT INDICATES DIRECTION OF THROW

SQUARE CEILING DIFFUSER — B–12"–400 — B–12"–400

SUPPLY GRILLE OR REGISTER — C–20X12–700 — C–20X12–700

RETURN OR EXHAUST GRILLE OR REGISTER — D–20X12–700 — D–20X12–700

RETURN OR EXHAUST GRILLE IN CEILING — E–24X24

FLEXIBLE DUCT — AIR DEVICE — HARD DUCT — FLEXIBLE DUCT

ROOF VENTILATOR — EXHAUST — SUPPLY

ELECTRIC DUCT HEATER — AP

FUTURE EQUIPMENT OR PIPE

DUCT STATIC PRESSURE SENSOR — SP

LIQUID DETECTOR — L

MOTOR OPERATED DAMPER — M

WALL SWITCH — S

EMERGENCY STOP SWITCH — ES

WALL SWITCH WITH TIMER (OUTDOOR RATED) — S T

SOLID STATE SPEED CONTOLLER — SP

HVAC ABBREVIATIONS

SMOKE DAMPER	SD
FIRE DAMPER	FD
BACKDRAFT DAMPER	BD
ACCESS DOOR	AD
ACCESS PANEL	AP
FLAT ON TOP	FOT
FLAT ON BOTTOM	FOB
TOP OF DUCT	TOD
BOTTOM OF DUCT	BOD
ROUND	ϕ
FLAT OVAL	
DOOR GRILLE	DG
OUTSIDE AIR	OA
RETURN AIR	RA
FLEXIBLE CONNECTION	FC
DRY BULB	DB
WET BULB	WB
SOUND ATTENUATOR	SA
ENTERING AIR TEMPERATURE	EAT
LEAVING AIR TEMPERATURE	LAT
ENTERING WATER TEMPERATURE	EWT
LEAVING WATER TEMPERATURE	LWT
AIR PRESSURE DROP	APD
WATER PRESSURE DROP	WPD
VARIABLE AIR VOLUME	VAV
POWERED INDUCTION UNIT	PIU
ABOVE FINISHED FLOOR	AFF
TEMPERATURE CONTROL PANEL	TCP
VARIABLE SPEED MOTOR CONTROLLER	VSC
RISE	R
DROP	D

PIPING - AIR CONDITIONING AND REFRIGERATION

REFRIGERANT HOT GAS BYPASS	RHG
REFRIGERANT SUCTION	RS
REFRIGERANT LIQUID	RL
CONDENSATE DRAIN	D
GLYCOL SUPPLY	GS
GLYCOL RETURN	GR

PIPING - FITTINGS

CONNECTION, BOTTOM

CONNECTION, TOP

ELBOW, 90°

ELBOW, TURNED DOWN

ELBOW, TURNED UP

LATERAL

REDUCER, CONCENTRIC

REDUCER, ECCENTRIC (TOP FLAT)

TEE

TEE, SINGLE SWEEP

UNION

FLANGE USED FOR UNION

PIPING - VALVES

BUTTERFLY

GATE — OR

GLOBE

GLOBE, ANGLE

CHECK

MOTOR OPERATED

CONTROL, PNEUMATIC, 2 WAY

CONTROL, PNEUMATIC, 3 WAY

PIPING - SPECIALTIES

ANCHOR

GUIDE

EXPANSION COMPENSATOR

BALANCING COCK

FLEXIBLE PIPE CONNECTION

PRESSURE GAGE — OR

PRESSURE GAGE COCK

WELL FOR THERMOMETER — OR

THERMOMETER — OR

STRAINER

FLOW MEASURING DEVICE

COMBINATION TEMP. & PRESSURE GAUGE TAPPING

MANUAL AIR VENT

AUTOMATIC AIR VENT

GENERAL NOTES (APPLICABLE TO ALL MECHANICAL DRAWINGS)

1. COORDINATE THE LOCATION OF ALL GRILLES, REGISTERS AND DIFFUSERS WITH THE ARCHITECTURAL DRAWINGS.
2. DUCT DIMENSIONS SHOWN ARE INSIDE CLEAR, ADJUST FOR ACOUSTIC LINER, ETC.
3. DUCTS AND EQUIPMENT WITH STANDING BRACES SHALL BE ARRANGED SO THAT THE BRACES WILL NOT BE OVER THE LIGHTS OR UNDER BEAMS IN AREAS WHERE THE CLEARANCE BETWEEN LIGHTS AND BEAMS, OR BEAMS AND CEILING, IS LIMITED.
4. ALL ROOF MOUNTED RTU'S, HOODS, DUCTWORK, PIPING, FANS, ETC. SHALL HAVE PREFABRICATED ROOF CURBS.
5. COORDINATE ALL DOOR GRILLES (D.G.) AND UNDERCUTTING OF DOORS WITH THE ARCHITECTURAL DRAWINGS.
6. SEE ELECTRICAL DRAWINGS FOR VOLTAGE OF ALL EQUIPMENT.
7. EACH DIFFUSER INDICATED WITH A FLEXIBLE DUCT SHALL HAVE A CONICAL "SPIN-IN" AND MANUAL VOLUME CONTROL DAMPER AT THE SHEET METAL TRUNK DUCT.
8. SPACE ABOVE THE CEILING IN SOME AREAS IS LIMITED. COORDINATE MECHANICAL, ETC. WITH ALL OTHER TRADES
9. ALL THERMOSTATS OR TEMPERATURE SENSORS ON EXTERIOR WALLS SHALL HAVE AN INSULATED BASE (SEE DETAIL 2 ON M-7.1) AND SHALL BE MOUNTED ABOVE THE BOTTOM OF THE GLASS AND TOP OF THE OFFICE FURNITURE.
10. CONTRACTOR SHALL NOT CUT ANY STRUCTURAL MEMBERS OF BUILDING WITHOUT PRIOR APPROVAL. COORDINATE HANGING OF EQUIPMENT WITH STRUCTURAL DRAWINGS.
11. LOCATION OF RETURN AIR OPENINGS AND GRILLES IN PARTITIONS, WALLS AND CEILINGS, AND THE LOCATION OF DUCTS OVER OR NEAR THESE OPENINGS SHOULD BE COORDINATED SO THE DUCT WILL NOT RESTRICT THE FLOW OF AIR THRU THE RETURN AIR OPENINGS OR GRILLES.
12. COORDINATE LOCATIONS OF ACCESS PANELS REQUIRED IN CEILINGS, WALLS, ETC. SO THAT ACCESS PANELS WILL NOT INTERFERE WITH LIGHTING OR ARCHITECTURAL ARRANGEMENTS, AND WILL AFFORD PROPER ACCESS TO MECHANICAL EQUIPMENT WHICH REQUIRES ADJUSTMENTS OR SERVICE.
13. PROVIDE ACCESS PANEL IN DUCT AT EACH FIRE DAMPER, SMOKE DAMPER, COMBINATION FIRE/SMOKE DAMPER, HEATING COIL, MOTOR OPERATED DAMPER AND DUCT MOUNTED BACKDRAFT DAMPER.
14. ALL AREAS USED AS RETURN AIR PLENUMS SHALL BE CONSTRUCTED WITH FIRE RESISTANT MATERIALS AND SHALL ONLY CONTAIN MATERIALS WHICH HAVE SMOKE DEVELOPED RATINGS NOT GREATER THAN 50 AND FLAME SPREAD RATINGS NOT GREATER THAN 25.
15. ALL ROUND DUCTS EXPOSED TO VIEW SHALL BE SPIRAL TYPE EQUAL TO UNITED MCGILL CORPORATION. PORTIONS INDICATED TO BE ACOUSTICALLY LINED SHALL BE UNITED MCGILL ACOUSTIC - K27 WITH 1" INTERNAL FIBERGLASS AND PERFORATED SHEET METAL LINER. (AS AN OPTION THE CONTRACTOR MAY USE 1" THICK SPIRACOUSTIC PLUS HIGH DENSITY FIBERGLASS LINER BY JOHNS MANVILLE.) SPIRAL RIBBED DUCT IS NOT ACCEPTABLE.
16. ALL DUCTWORK EXPOSED TO VIEW SHALL BE RIGID SHEETMETAL
17. FLEXIBLE ROUND DUCTWORK TO DIFFUSERS MAY BE USED AS DETAILED IF DUCTWORK IS ABOVE A CEILING AND NOT VISIBLE FROM OTHER HABITABLE AREAS.
18. WIRING FROM THERMOSTATS AND OTHER CONTROL DEVICES ON "PART HIGH" WALLS SHALL BE ROUTED IN WALLS, BELOW RAISED FLOORS OR TIGHT TO DUCTWORK TO AVOID ALL VISUALLY EXPOSED WIRING, CABLES, CONDUIT, ETC.
19. ALL EXHAUST DUCTWORK SHALL BE RIGID SHEETMETAL.

ALL SYMBOLS AND ABBREVIATIONS MAY NOT APPEAR ON THE DRAWINGS.

RECEIVED
MAY 0 8 2006
INTEGRA CONSTRUCTION, INC.

Stevens&Wilkinson
STEVENS & WILKINSON STANG & NEWDOW, INC.
ARCHITECTURE ENGINEERING INTERIORS
100 PEACHTREE STREET NW, SUITE 2500
ATLANTA, GA 30303
P 404.522.8888
F 404.521.6204
WWW.SW-SN.COM

idea|span
linking knowledge and design
A STEVENS & WILKINSON COMPANY
100 PEACHTREE STREET NW, SUITE 2400
ATLANTA, GA 30303
P 404.522.8899
F 404.521.6343
www.idea-span.com

■ SUBMITTALS

DATE	DESCRIPTION
05.08.06	PRICING / PERMIT SET

■ REVISIONS

DATE	DESCRIPTION

□ APPROVED FOR CONSTRUCTION
■ NOT APPROVED FOR CONSTRUCTION

THIS DRAWING IS THE PROPERTY OF STEVENS & WILKINSON STANG & NEWDOW, INC. UNAUTHORIZED USE OF ANY KIND, INCLUDING USE ON OTHER PROJECT IS PROHIBITED.
© STEVENS & WILKINSON STANG & NEWDOW, INC.

■ PROJECT NUMBER: 06041.00
■ DATE: 05.08.06
■ FILE: F:/PROJECTS/06041.00/DESIGN

cingular WIRELESS
PUEBLO, COLORADO

HVAC NOTES AND LEGEND

M0.1

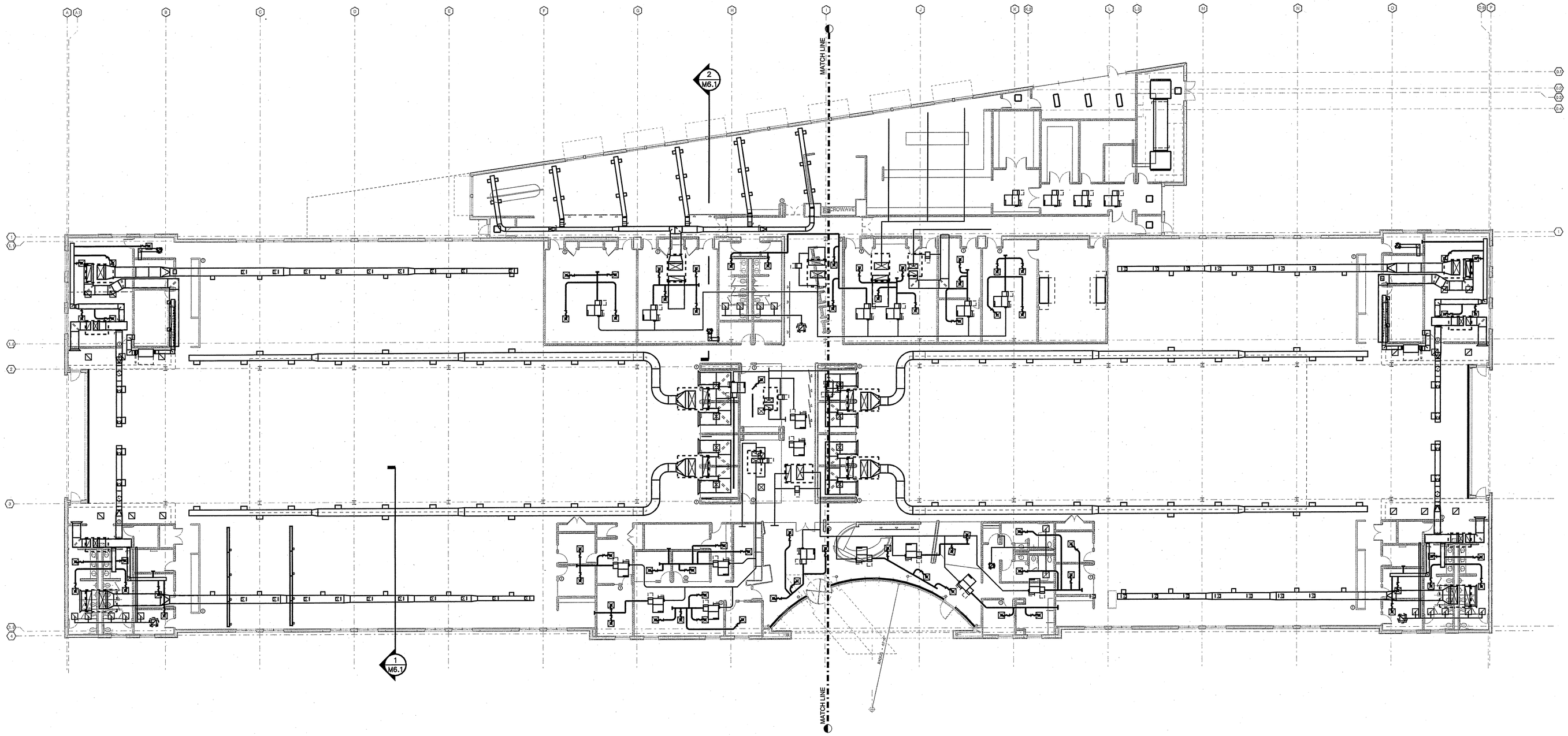

OVERALL HVAC FLOOR PLAN (1)

Scale: 1/16"=1'-0"

RECEIVED
MAY 08 2006
INTEGRA CONSTRUCTION, INC.

Stevens&Wilkinson
STEVENS & WILKINSON STANG & NEWDOW, INC.
ARCHITECTURE ENGINEERING INTERIORS

100 PEACHTREE STREET NW, SUITE 2500
ATLANTA, GA 30303
P 404.522.8888
F 404.521.6204
WWW.SW-SN.COM

idea|span
linking knowledge and design

A STEVENS & WILKINSON COMPANY

100 PEACHTREE STREET NW, SUITE 2400
ATLANTA, GA 30303
P 404.522.8899
F 404.521.6343
www.idea-span.com

■ SUBMITTALS

DATE	DESCRIPTION
05.08.06	PRICING / PERMIT SET

■ REVISIONS

DATE	DESCRIPTION

□ APPROVED FOR CONSTRUCTION
■ NOT APPROVED FOR CONSTRUCTION

THIS DRAWING IS THE PROPERTY OF STEVENS & WILKINSON STANG & NEWDOW, INC. UNAUTHORIZED USE OF ANY KIND, INCLUDING USE ON OTHER PROJECT IS PROHIBITED.

©STEVENS & WILKINSON STANG & NEWDOW, INC.

■ PROJECT NUMBER: 06041.00
■ DATE: 05.08.06
■ FILE: F:/PROJECTS/06041.00/DESIGN

cingular WIRELESS

PUEBLO, COLORADO

OVERALL HVAC FLOOR PLAN

M2.1

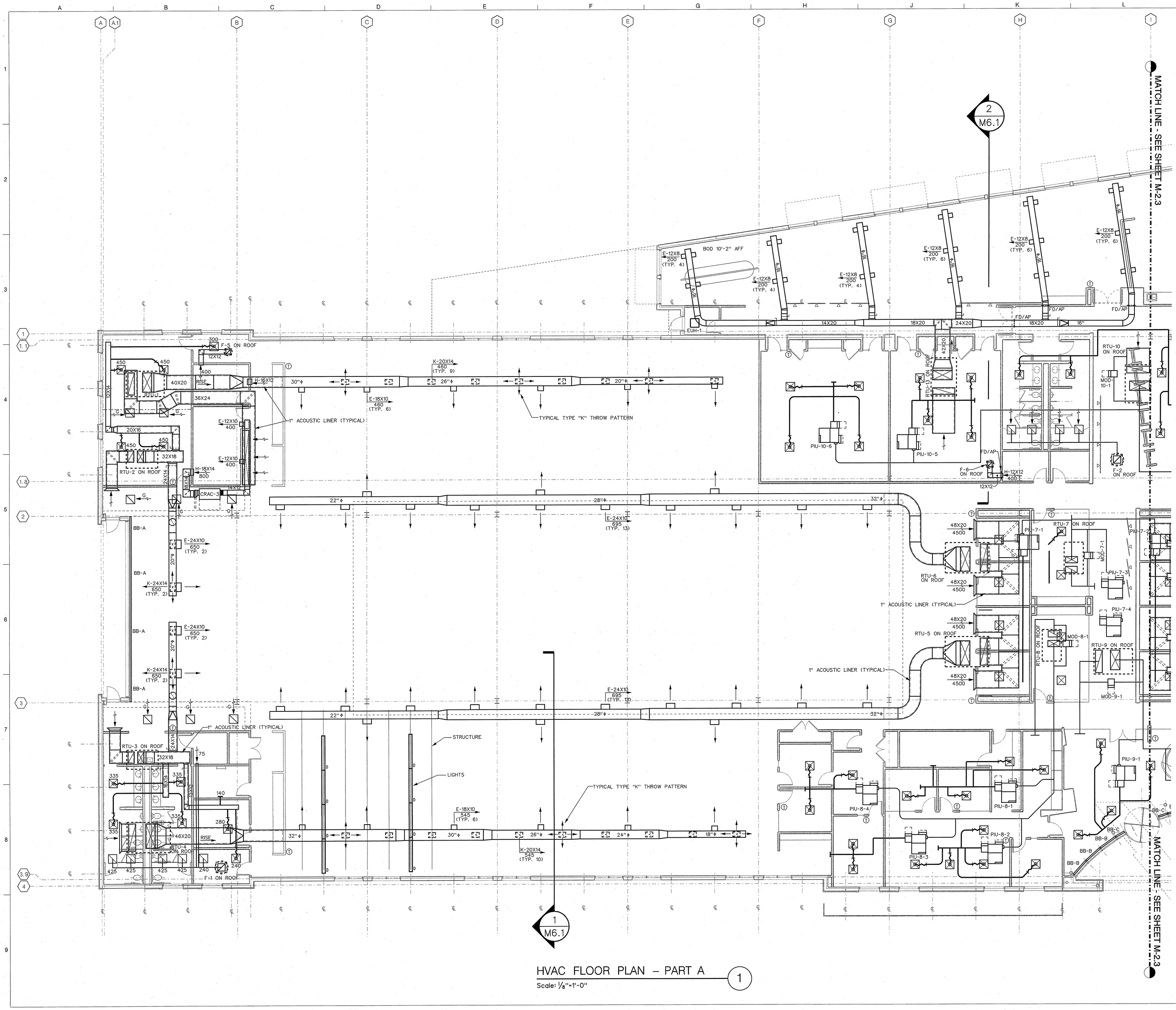

HVAC FLOOR PLAN – PART A

Scale: 1/8"=1'-0"

1

RECEIVED
MAY 0 8 2006
INTEGRA CONSTRUCTION, INC.

S&W

Stevens&Wilkinson
STEVENS & WILKINSON STANG & NEWDOW, INC.
ARCHITECTURE ENGINEERING INTERIORS

100 PEACHTREE STREET NW, SUITE 2500
ATLANTA, GA 30303
P 404.522.8888
F 404.521.6204
WWW.SW-SN.COM

idea|span
linking knowledge and design

A STEVENS & WILKINSON COMPANY

100 PEACHTREE STREET NW, SUITE 2400
ATLANTA, GA 30303
P 404.522.8899
F 404.521.6343
www.idea-span.com

■ SUBMITTALS

DATE	DESCRIPTION
05.08.06	PRICING / PERMIT SET

■ REVISIONS

DATE	DESCRIPTION

□ APPROVED FOR CONSTRUCTION
■ NOT APPROVED FOR CONSTRUCTION

THIS DRAWING IS THE PROPERTY OF STEVENS & WILKINSON STANG & NEWDOW, INC. UNAUTHORIZED USE OF ANY KIND, INCLUDING USE ON OTHER PROJECT IS PROHIBITED.

©STEVENS & WILKINSON STANG & NEWDOW, INC.

■ PROJECT NUMBER: 06041.00
■ DATE: 05.08.06
■ FILE: F:/PROJECTS/06041.00/DESIGN

cingular WIRELESS
PUEBLO, COLORADO

HVAC FLOOR PLAN
PART-A

M2.2

MATCH LINE - SEE SHEET M2.2

MATCH LINE - SEE SHEET M2.2

AC-1
AC-2
EUH-2
EUH-5
EUH-6
EUH-7
EUH-8
EUH-4
EUH-3
AC UNIT PIPING, DUCTWORK SHALL BE LOCATED OVER ISLE
PIU-15-1
PIU-15-2
PIU-15-3
PIU-15-4
E-12X8 200 (TYP. 6)
FD/AP
18X20
16"
RTU-10 ON ROOM
MOD-10-1
RTU-14 ON ROOM
RTU-15 ON ROOM
MOD-15-1
CRAC-1
CRAC-2
PIU-10-1
PIU-10-2
PIU-10-3
PIU-10-4
F-2 ON ROOF
H-12X12 400
2'FLX3'WX3'-4"H PLENUM
RTU-7 ON ROOF
PIU-7-1
MOD-7-1
PIU-7-2
PIU-7-3
PIU-7-4
4500 48X20
RTU-11 ON ROOF
1" ACOUSTIC LINER (TYPICAL)
RTU-8 ON ROOF
MOD-8-1
RTU-9 ON ROOF
MOD-9-1
RTU-12 ON ROOF
PIU-8-1
PIU-8-2
PIU-9-1
PIU-9-2
PIU-9-3
PIU-9-4
PIU-9-5
BB-B
BB-C
F-3 ON ROOF
K-20X14 445 (TYP. 7)
TYPICAL TYPE "K" THROW PATTERN
E-18X10 445 (TYP. 4)
1" ACOUSTIC LINER (TYPICAL)
E-24X10 750 (TYP. 12)
E-18X10 495 (TYP. 5)
K-20X14 535 (TYP. 7)
F-5 ON ROOF
12X12
RTU-16 ON ROOF
36X18
36X24
H-16X12
E-12X10 400
20X16
32X18
RTU-17 ON ROOF
H-18X14 800
18X14
24X14
CRAC-4
14X12
E-24X10 650 (TYP. 2)
K-24X14 650 (TYP. 2)
BB-A
RTU-18 ON ROOF
RTU-19 ON ROOF
40X20
F-1 ON ROOF
RISE

HVAC FLOOR PLAN – PART B

Scale: 1/8"=1'-0"

1

RECEIVED
MAY 0 8 2006
INTEGRA CONSTRUCTION, INC.

Stevens&Wilkinson
STEVENS & WILKINSON STANG & NEWDOW, INC.
ARCHITECTURE ENGINEERING INTERIORS
100 PEACHTREE STREET NW, SUITE 2500
ATLANTA, GA 30303
P 404.522.8888
F 404.521.6204
WWW.SW-SN.COM

idea|span
linking knowledge and design
A STEVENS & WILKINSON COMPANY
100 PEACHTREE STREET NW, SUITE 2400
ATLANTA, GA 30303
P 404.522.8899
F 404.521.6343
www.idea-span.com

■ SUBMITTALS

DATE	DESCRIPTION
05.08.06	PRICING / PERMIT SET

■ REVISIONS

DATE	DESCRIPTION

□ APPROVED FOR CONSTRUCTION
■ NOT APPROVED FOR CONSTRUCTION

THIS DRAWING IS THE PROPERTY OF STEVENS & WILKINSON STANG & NEWDOW, INC. UNAUTHORIZED USE OF ANY KIND, INCLUDING USE ON OTHER PROJECT IS PROHIBITED.
©STEVENS & WILKINSON STANG & NEWDOW, INC.

■ PROJECT NUMBER: 06041.00
■ DATE: 05.08.06
■ FILE: F:/PROJECTS/06041.00/DESIGN

cingular WIRELESS
PUEBLO, COLORADO

HVAC FLOOR PLAN- PART-B

M2.3

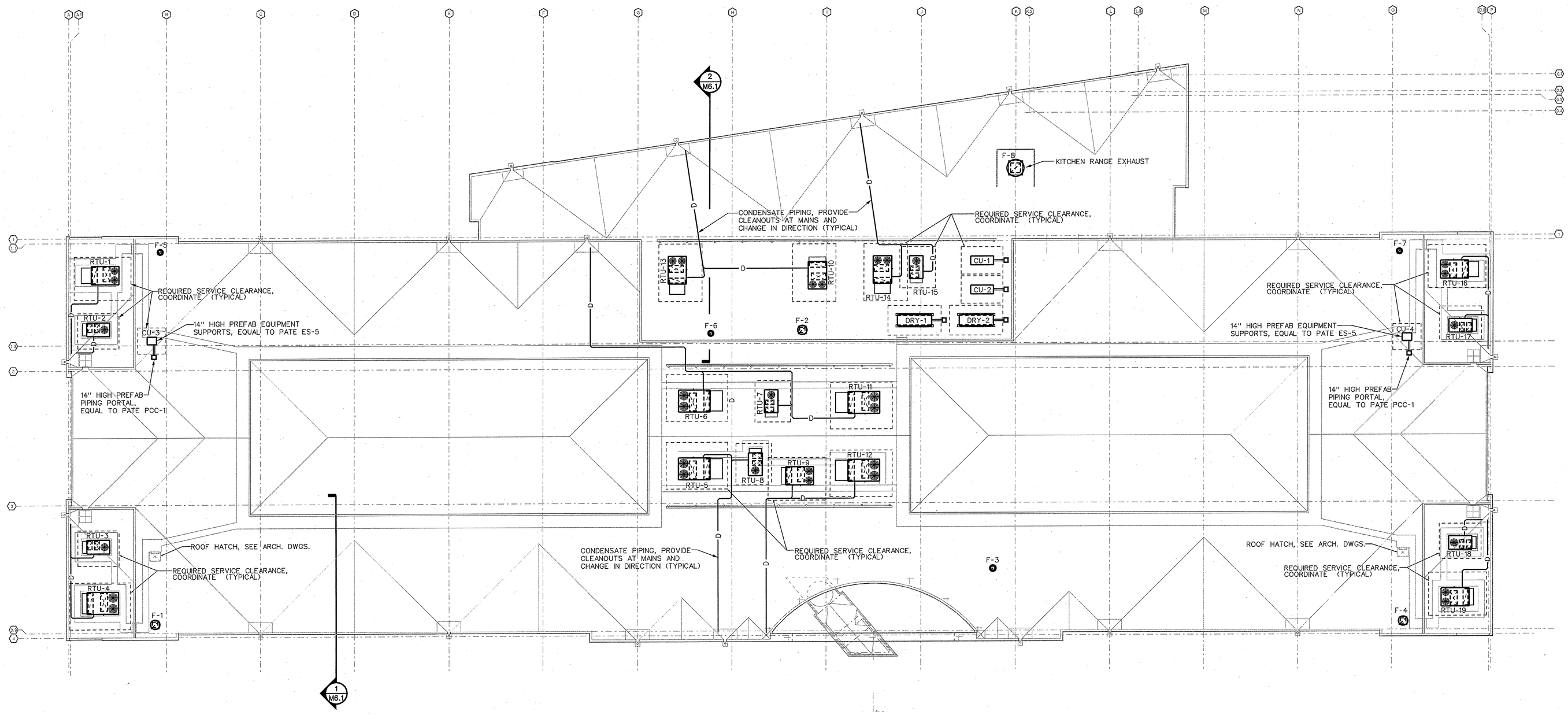

HVAC ROOF PLAN 1

Scale: 1/16"=1'-0"

NOTES: (THIS SHEET ONLY)

1. PROVIDE RIGID TYPE "M" COPPER CONDENSATE PIPING FROM ALL RTU'S, SLOPED TO THE NEAREST ROOF DRAIN CONDUCTOR HEAD, SUPPORTED ON ABS PLASTIC "PILLOW BLOCKS" AT MAXIMUM 10-FEET ON CENTER ALONG LENGTHS OF CONDENSATE PIPE. PROVIDE STRAP ATTACHMENTS OF PIPE TO PILLOW BLOCKS. PROVIDE ADDITIONAL ROOFING CAP SHEET WEARING SURFACE, ADHERE TO THE PRIMARY ROOF SHEET. DO NOT ADHERE THE PILLOW BLOCKS TO THIS WEARING SURFACE CAP SHEET MATERIAL.
2. PLUMBING VENTS SHALL BE A MINIMUM OF 15'-0" FROM OUTSIDE AIR INTAKES. COORDINATE WITH PLUMBING
3. EXHAUST FANS SHALL BE A MINIMUM OF 15'-0" FROM OUTSIDE AIR INTAKES.

RECEIVED
MAY 0 8 2006
INTEGRA CONSTRUCTION, INC.

S&W
Stevens&Wilkinson
STEVENS & WILKINSON STANG & NEWDOW, INC.
ARCHITECTURE ENGINEERING INTERIORS
100 PEACHTREE STREET NW, SUITE 2500
ATLANTA, GA 30303
P 404.522.8888
F 404.521.6204
WWW.SW-SN.COM

idea|span
linking knowledge and design
A STEVENS & WILKINSON COMPANY
100 PEACHTREE STREET NW, SUITE 2400
ATLANTA, GA 30303
P 404.522.8899
F 404.521.6343
www.idea-span.com

■ SUBMITTALS

DATE	DESCRIPTION
05.08.06	PRICING / PERMIT SET

■ REVISIONS

DATE	DESCRIPTION

□ APPROVED FOR CONSTRUCTION
■ NOT APPROVED FOR CONSTRUCTION

THIS DRAWING IS THE PROPERTY OF STEVENS & WILKINSON STANG & NEWDOW, INC. UNAUTHORIZED USE OF ANY KIND, INCLUDING USE ON OTHER PROJECT IS PROHIBITED.
© STEVENS & WILKINSON STANG & NEWDOW, INC.

■ PROJECT NUMBER: 06041.00
■ DATE: 05.08.06
■ FILE: F:/PROJECTS/06041.00/DESIGN

cingular WIRELESS

PUEBLO, COLORADO

HVAC ROOF PLAN

M3.1

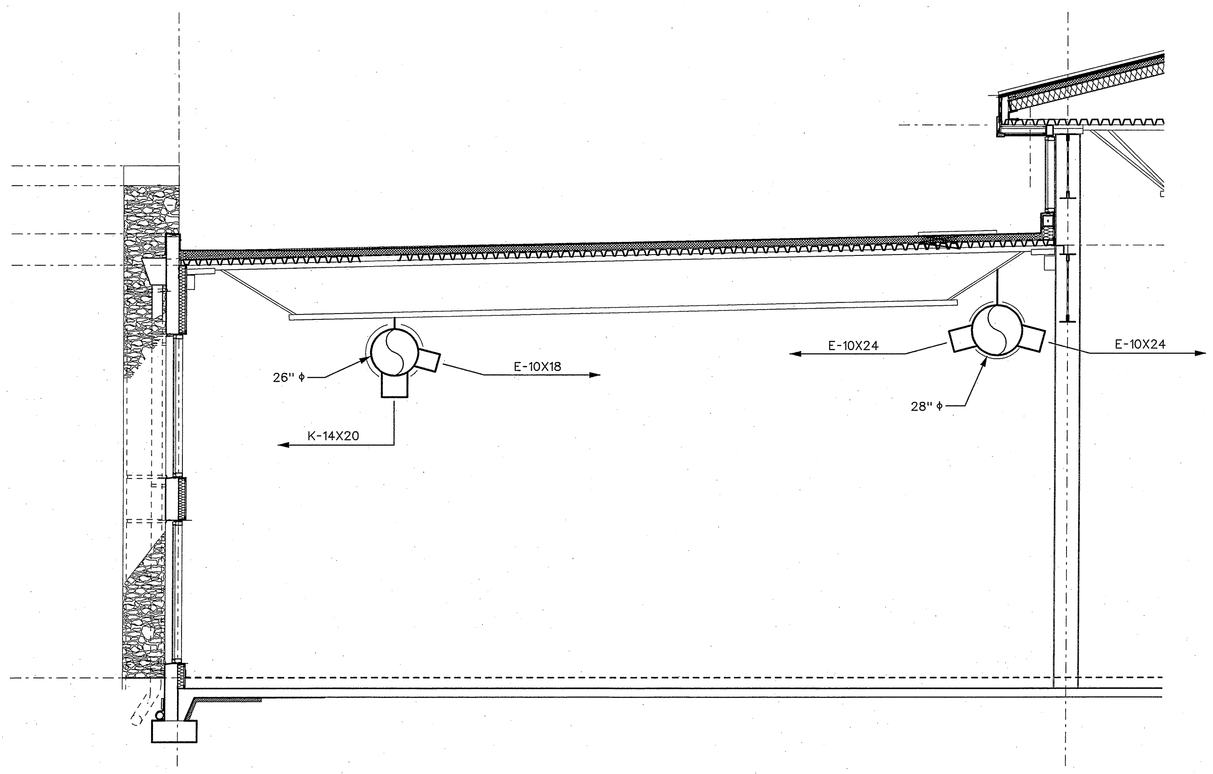

SECTION 1
1/4"=1'-0"
1

SECTION 2
1/4"=1'-0"
2

RECEIVED
MAY 08 2006
INTEGRA CONSTRUCTION, INC.

Stevens&Wilkinson
STEVENS & WILKINSON STANG & NEWDOW, INC.
ARCHITECTURE ENGINEERING INTERIORS
100 PEACHTREE STREET NW, SUITE 2500
ATLANTA, GA 30303
P 404.522.8888
F 404.521.6204
WWW.SW-SN.COM

idea|span
linking knowledge and design
A STEVENS & WILKINSON COMPANY
100 PEACHTREE STREET NW, SUITE 2400
ATLANTA, GA 30303
P 404.522.8899
F 404.521.6343
www.idea-span.com

■ SUBMITTALS

DATE	DESCRIPTION
05.08.06	PRICING / PERMIT SET

■ REVISIONS

DATE	DESCRIPTION

□ APPROVED FOR CONSTRUCTION
■ NOT APPROVED FOR CONSTRUCTION

THIS DRAWING IS THE PROPERTY OF STEVENS & WILKINSON STANG & NEWDOW, INC. UNAUTHORIZED USE OF ANY KIND, INCLUDING USE ON OTHER PROJECT IS PROHIBITED.

© STEVENS & WILKINSON STANG & NEWDOW, INC.

■ PROJECT NUMBER: 06041.00
■ DATE: 05.08.06
■ FILE: P:/PROJECTS/06041.00/DESIGN

cingular WIRELESS

PUEBLO, COLORADO

HVAC SECTIONS

M6.1

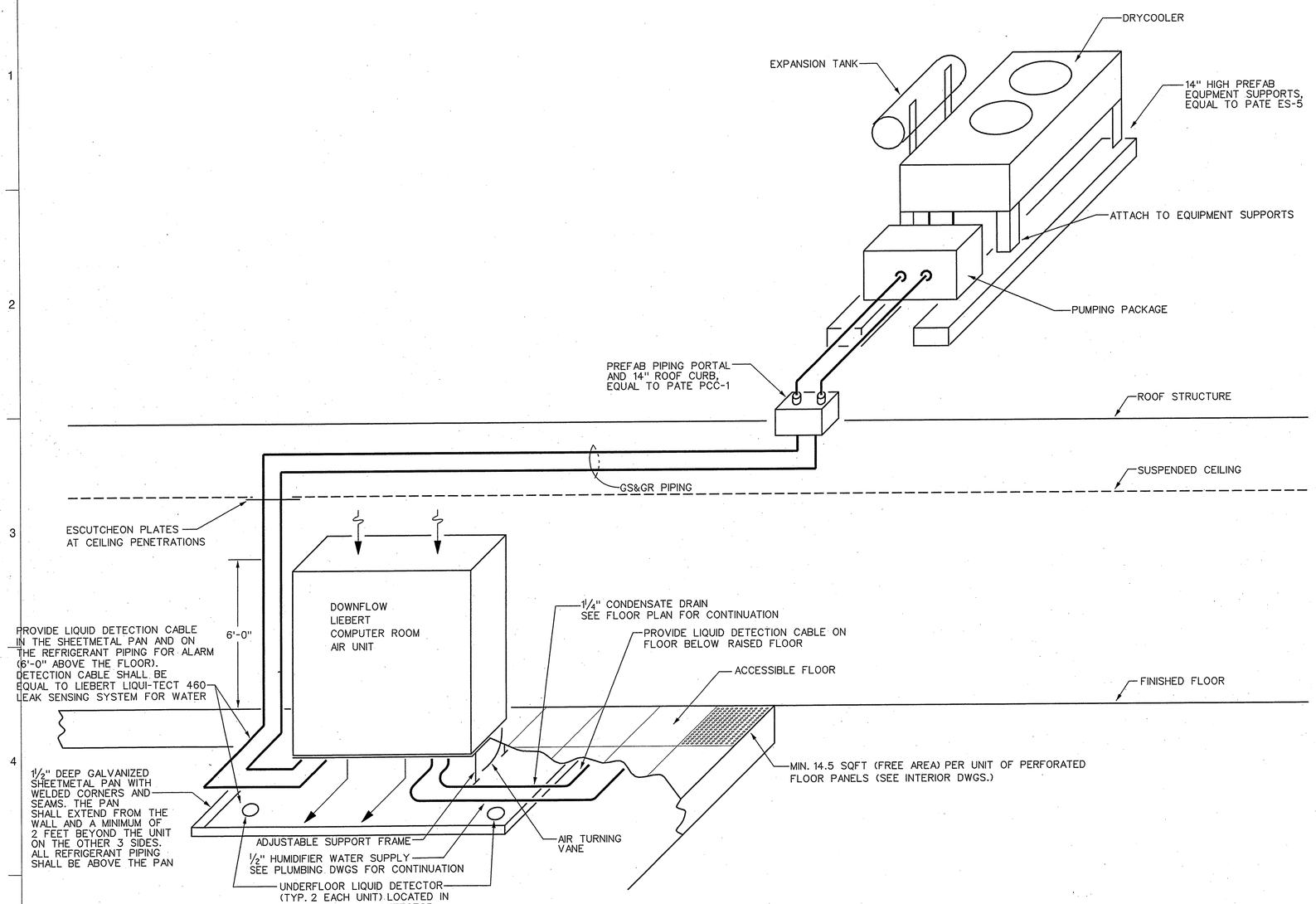

COMPUTER ROOM AIR UNIT SCHEMATIC 1

NO SCALE

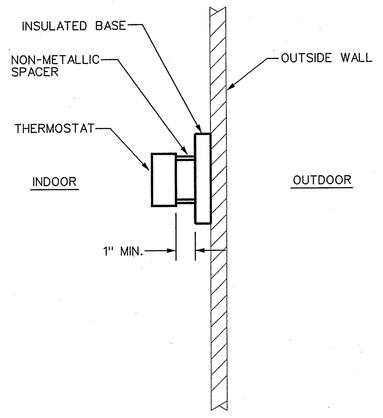

EXTERIOR WALL MOUNTED THERMOSTAT 2

NO SCALE

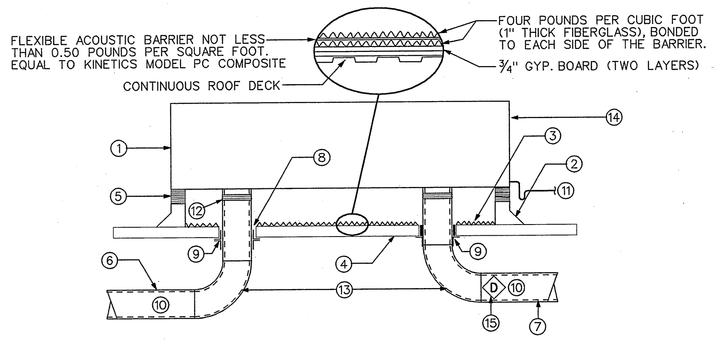

LEGEND

1. ROOF TOP CONDITIONING UNIT
2. CURB AND FLASHING
3. CURB INFILL
4. ROOF DECK CONTINUOUS UNDER UNIT
5. VIBRATION ISOLATION BASE (SPRINGS WITH 1" DEFLECTION, EQUAL TO MASON CMAB)
6. SUPPLY DUCT
7. RETURN AIR DUCT
8. CAULK AROUND ALL PENETRATIONS, TYP.
9. PROVIDE A CONTINUOUS ANGLE SAFEOFF ALL AROUND EACH DUCT AT BOTTOM OF ROOF DECK.
10. SEE PLANS FOR SIZES OF RETURN AIR ATTENUATORS/TRAPS AND SUPPLY DUCTWORK.
11. DRAIN WITH P-TRAP, SEE PLANS FOR CONTINUATION.
12. FLEX. CONNECTION, TYP.
13. 1" ACOUSTIC LINER (20'-0" MIN. LENGTH)
14. SET UNIT LEVEL
15. SMOKE DETECTOR

CURB INFILL NOTE:
THE TWO LAYERS OF GYPSUM SHALL HAVE THEIR JOINTS BROKEN, BE ATTACHED TO THE ROOF DECK AND EACH OTHER BY LIQUID ADHESIVE. ALL JOINTS INCLUDING THOSE AT THE VERTICAL CONNECTIONS TO THE INSIDE SURFACE OF THE CURB, AND PENETRATIONS SEALED. PLACE THE FIBERGLASS COMPOSITE ON TOP OF THE GYPSUM BOARD TIGHTLY FITTED INSIDE THE CURB.

ROOFTOP AIR UNIT DETAIL 3

NO SCALE

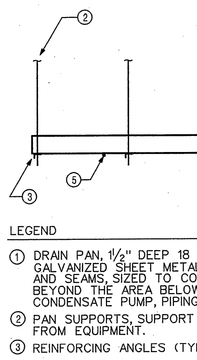

LEGEND

1. DRAIN PAN, 1½" DEEP 18 GAUGE GALVANIZED SHEET METAL WITH WELDED CORNERS AND SEAMS, SIZED TO COVER AND EXTEND 3" BEYOND THE AREA BELOW UNIT FAN COIL SECTION, CONDENSATE PUMP, PIPING CONNECTIONS AND VALVES.
2. PAN SUPPORTS, SUPPORT INDEPENDENTLY FROM EQUIPMENT.
3. REINFORCING ANGLES (TYP.).
4. FLOAT SWITCH TO SHUT DOWN UNIT
5. MANUAL DRAIN PLUG

AUXILLARY DRAIN PAN DETAIL 5

NO SCALE

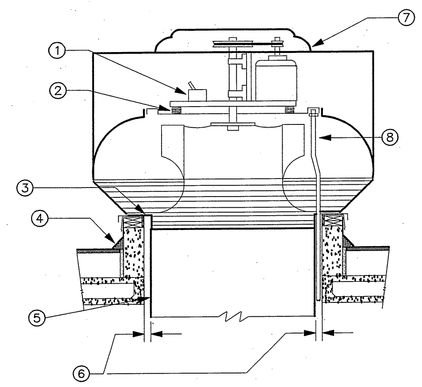

LEGEND:

1. MANUAL DISCONNECT SWITCH (FACTORY MTD. & WIRED)
2. RUBBER "IN-SHEAR" VIBRATION ISOLATORS
3. MOUNTING BRACKET
4. ROOF CURB
5. DUCT, TRANSITION TO FAN INLET SIZE
6. 1" MIN. CLEARANCE
7. EXHAUST FAN
8. ELECTRICAL CONDUIT

UPBLAST FAN DETAIL 6

NO SCALE

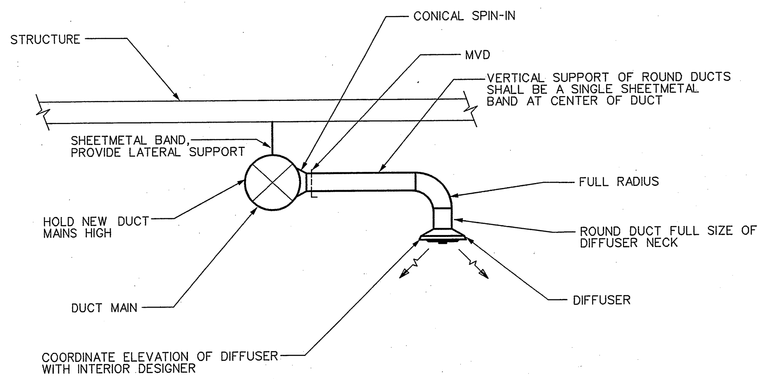

EXPOSED DUCT DETAIL 4

NO SCALE

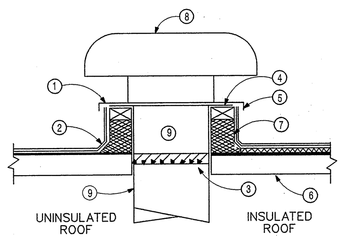

LEGEND

1. ANCHOR TO CURB & SEAL BOLT HOLES WITH MASTIC.
2. RUN ROOFING FLASHING UP UNDER CURB CAP
3. BACK-DRAFT DAMPER
4. TURN OUT DUCT FLANGE UNDER CURB CAP
5. CURB CAP BASE
6. ROOF STRUCTURE
7. CURB & CANT STRIP. SEE SPECIFICATIONS
8. ROOF FAN
9. DUCT FULL SIZE OF CURB OR FAN CONNECTION. EXTEND DOWN THROUDH ROOF STRUCTURE.

ROOF FAN DETAIL 8

NO SCALE

NOTE: ROOF OPENING SHOWN ON PLANS ARE APPROXIMATE. VERIFY CURB DIMENSIONS FOR ACTUAL EQUIPMENT TO BE FURNISHED BEFORE FRAMING OPENINGS OR FORMING CURBS.

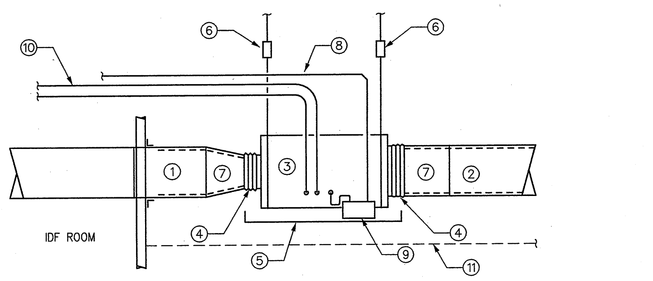

LEGEND:

1. 1" ACOUSTICALLY LINED SUPPLY AIR DUCT SEE PLANS FOR SIZE AND ROUTING
2. 1" ACOUSTICALLY LINED RETURN AIR DUCT. SEE PLANS FOR SIZE AND ROUTING
3. COMPUTER ROOM AIR CONDITIONING UNIT (CRAC)
4. FLEXIBLE CONNECTION
5. AUXILLARY DRAIN PAN, SEE DETAIL 5 THIS SHEET
6. SUSPEND UNIT FROM STRUCTURE WITH VIBRATION ISOLATORS
7. TRANSITION AS REQUIRED
8. CONDENSATE DRAIN PIPING, SEE FLOOR PLAN FOR SIZE AND ROUTING.
9. CONDENSATE PUMP, LOCATED IN AUXILLARY DRAIN PAN
10. RS & RL PIPING, SEE FLOOR PLAN FOR CONTINUATION.
11. SUSPENDED CEILING, SEE INTERIORS DWGS.

CRAC UNIT DETAIL 9

NO SCALE

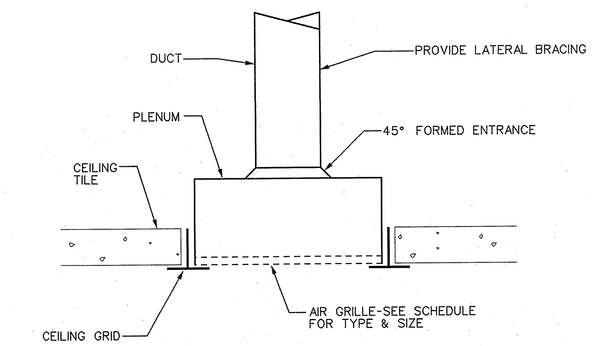

EXHAUST DUCT CONNECTION DETAIL 7

NO SCALE

RECEIVED
MAY 0 8 2006
INTEGRA CONSTRUCTION, INC.

Stevens&Wilkinson
STEVENS & WILKINSON STANG & NEWDOW, INC.
ARCHITECTURE ENGINEERING INTERIORS
100 PEACHTREE STREET NW, SUITE 2500
ATLANTA, GA 30303
P 404.522.8888
F 404.521.6204
WWW.SW-SN.COM

idea|span
linking knowledge and design
A STEVENS & WILKINSON COMPANY
100 PEACHTREE STREET NW, SUITE 2400
ATLANTA, GA 30303
P 404.522.8899
F 404.521.6343
www.idea-span.com

■ SUBMITTALS

DATE	DESCRIPTION
05.08.06	PRICING / PERMIT SET

■ REVISIONS

DATE	DESCRIPTION

□ APPROVED FOR CONSTRUCTION
■ NOT APPROVED FOR CONSTRUCTION

THIS DRAWING IS THE PROPERTY OF STEVENS & WILKINSON STANG & NEWDOW, INC. UNAUTHORIZED USE OF ANY KIND, INCLUDING USE ON OTHER PROJECT IS PROHIBITED.

© STEVENS & WILKINSON STANG & NEWDOW, INC.

■ PROJECT NUMBER: 06041.00
■ DATE: 05.08.06
■ FILE: F:/PROJECTS/06041.00/DESIGN

cingular WIRELESS
PUEBLO, COLORADO

HVAC DETAILS

M7.1

LEGEND

1. SHEET METAL MAIN DUCT
2. PROVIDE SEALANT EACH CONNECTION POINT SEE SPECIFICATIONS FOR ATTACHMENTS
3. REDUCERS AS REQ'D.
4. LINED SHEET METAL 5'-0" MIN. THRU ELLS OR STRAIGHT DUCT. INCREASE LENGTH AS REQ'D TO REDUCE NOISE TO SPECIFIED VALUE (NO OUTLETS IN THIS SECTION)
5. 1" ACOUSTICAL LINER.
6. POWERED INDUCTION UNIT
7. 24" STRAIGHT LENGTH OF RIGID S/M DUCT
8. INSULATED FLEX. DUCT 18" MAX. LENGTH FOR BRANCH SIZE SEE FLOOR PLAN
9. CONICAL FITTING
10. FAN
11. HEATING COIL
12. R.A. S/M BOOT W/ 1" LINER (4'-0" MIN LENGTH) BOOT OPENS UPWARD. FULL SIZE OF PIU CASING.
13. FLANGED CONNECTION SEALED TIGHT

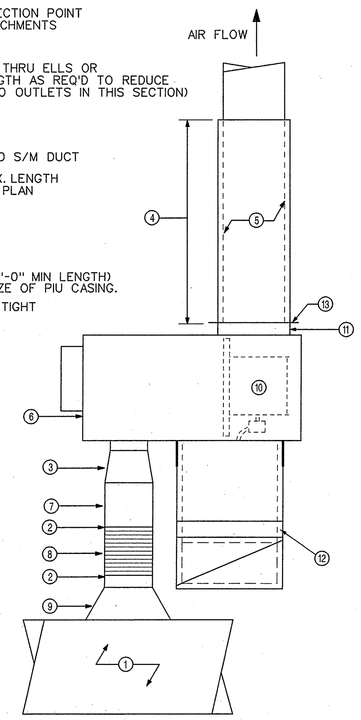

POWERED INDUCTION UNIT (PIU-C) DETAIL 1

NO SCALE

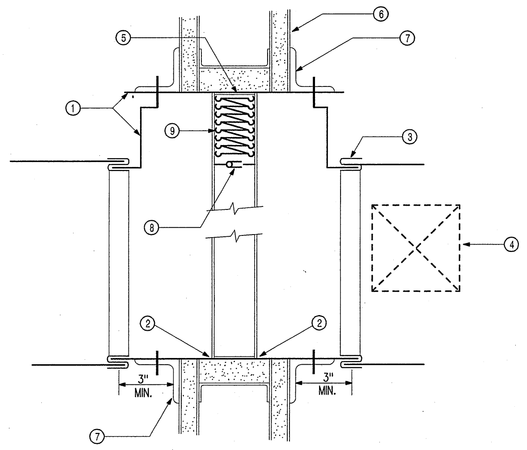

LEGEND

1. SLEEVE TO EXTEND 3 INCHES BEYOND EACH SIDE OF PARTITION.
2. FIRE DAMPER FRAME ATTACHED TO SLEEVE BY DAMPER MANUFACTURER.
3. "S" DUCT CONNECTION -- NOT SCREWED OR BOLTED TO SLEEVE.
4. ACCESS PANEL PREFERABLY IN HORIZONTAL PLANE.
5. OPENING TO BE 1/8 INCH WIDER FOR EACH FOOT OF SLEEVE WIDTH AND 1/8 INCH HIGHER FOR EACH FOOT OF SLEEVE HEIGHT. MIN. (CLEARANCE OF 1/4" IS REQUIRED).
6. FIRE PARTITION SEE ARCH. DWGS.
7. ANGLES ALL AROUND SLEEVE ON BOTH SIDES OF PARTITION. WELDED, BOLTED OR SCREWED TO SLEEVE AT MAX. SPACING OF 12" O.C. WITH MIN. OF TWO CONNECTIONS IN EACH SIDE, TOP AND BOTTOM. ANGLES ARE NOT ATTACHED TO WALL TO PROVIDE FOR EXPANSION. IN NO CASE SHALL ANGLE OVERLAP WALL FRAMING LESS THAN 1 INCH. SEE MANUFACTURERS APPROVAL FOR SIZE AND GAGE OF ANGLE.
8. FUSEABLE LINK
9. DAMPER BLADES OUT OF AIR STREAM

FIRE DAMPER INSTALLATION DETAIL (OUT OF AIRSTREAM) 2

NO SCALE

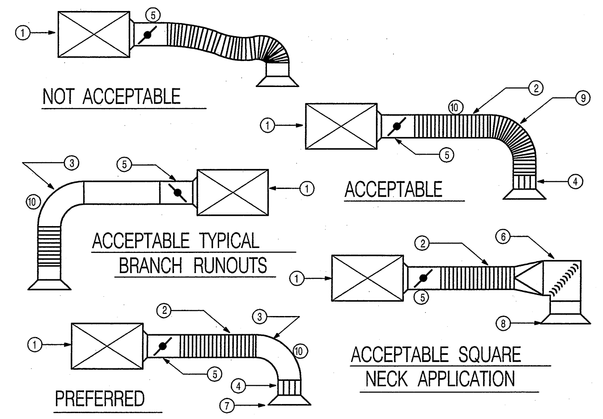

LEGEND

1. TRUNK DUCT
2. FLEXIBLE DUCT SUPPORTED TO PREVENT SAGS. FULLY EXTEND DUCT & CUT TO LENGTH.
3. FULL RADIUS ELBOW
4. STRAIGHTENING VANES TO ADJUST AIR EVENLY OVER DIFFUSER
5. SPIN IN CONN. W/CONICAL T.O. AND DAMPER. DO ALL ROUGH BALANCING AT THIS DAMPER.(TYPICAL)
6. SQUARE ELBOW WITH TURNING VANES. DISTRIBUTION VANES IN DIFFUSER NOT REQUIRED.
7. ROUND NECK DIFFUSER WITH VOLUME DAMPER FOR FINISH BALANCING ONLY
8. SQUARE NECK DIFFUSER WITH VOLUME DAMPER FOR FINISH BALANCING ONLY
9. DUCT SUPPORTED TO PROVIDE EQUIVALENT OF FULL RADIUS ELBOW. SUBMIT DETAILS
10. DUCT IS FULL SIZE OF DIFFUSER NECK

FLEXIBLE DUCT CONNECTION DETAIL 3

NO SCALE

NOTE: FLEXIBLE DUCT SHALL NOT EXCEED 5'-0" IN LENGTH.

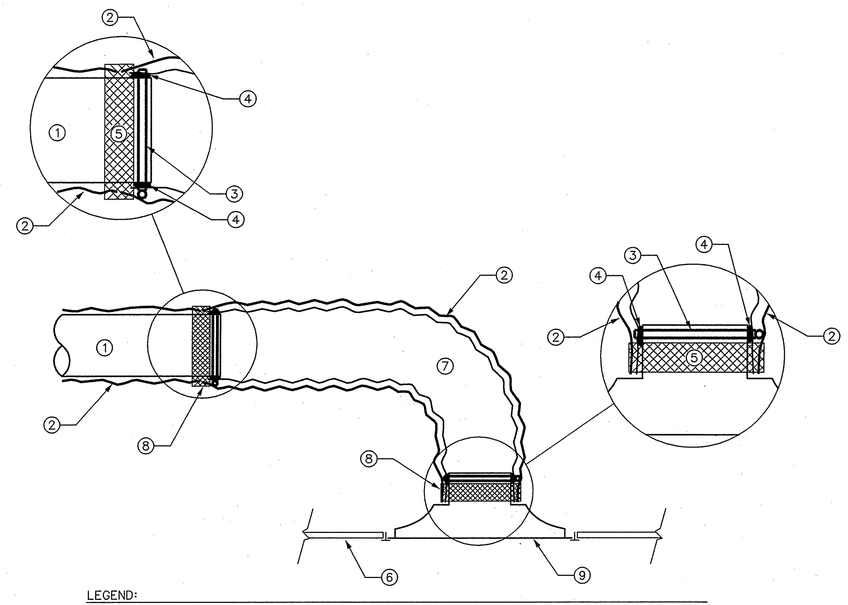

LEGEND:

1. ROUND SHEETMETAL DUCT
2. DUCT INSULATION
3. DRAW BAND
4. MASTIC (LISTED AND LABELED STANDARD UL 181B) ALL AROUND CONNECTION.
5. ALUMINUM TAPE (LISTED AND LABELED STANDARD UL 181B)
6. CEILING
7. FULLY EXTENDED, INSULATED, LOW PRESSURE, FLEXIBLE DUCTWORK. 5'-0" MAXIMUM LENGTH
8. ROLL INSULATION BACK FROM POINT OF ATTACHMENT. SECURE INNER DUCT (CORE) TO METAL CONNECTION WITH FULL COVERAGE OF MASTIC (LISTED AND LABELED STANDARD UL 181B) AND DRAW BAND. ROLL INSULATION BACK OVER DRAW BAND AND METAL CONNECTION. SECURE INSULATION WITH ONE WRAP OF 2½INCH WIDTH ALUMINUM TAPE (LISTED AND LABELED STANDARD UL 181B) TO SEAL VAPOR BARRIER
9. DIFFUSER

DUCT AND DIFFUSER CONNECTION DETAIL 4

NO SCALE

NOTE: SEE FLEXIBLE DUCT CONNECTION DETAIL FOR ADDITIONAL REQUIREMENTS

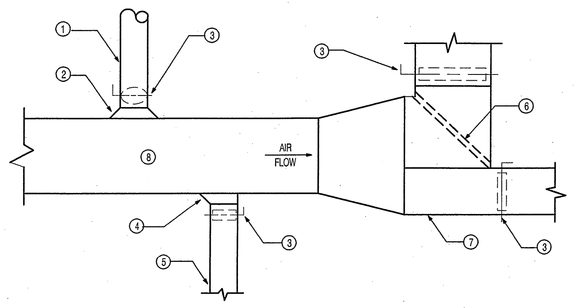

LEGEND

1. ROUND BRANCH DUCT.
2. CONICAL SPIN IN (NO SCOOP).
3. MANUAL DAMPER ALL BRANCHES
4. 45° THROAT
5. RECTANGULAR BRANCH DUCT.
6. TURNING VANES. SEE SPECIFICATION.
7. TRUNK SPLIT.
8. TRUNK DUCTWORK

TYPICAL BRANCH TAKEOFF 5

NO SCALE

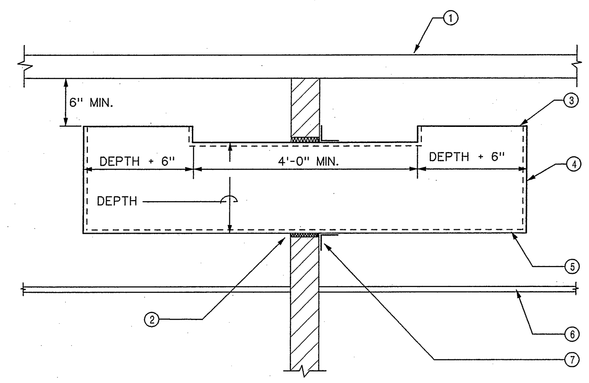

LEGEND:

1. STRUCTURE
2. SEALANT
3. DUCT-OPEN ON TOP
4. 1" ACOUSTICAL LINER
5. DUCT SIZE AS INDICATED ON FLOOR PLAN
6. CEILING
7. SHEETMETAL SAFE-OFF ALL AROUND

TYPICAL TRANSFER DUCT 6

NO SCALE

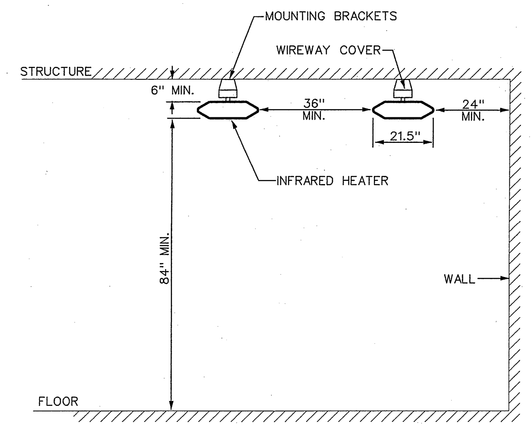

INFRARED HEATER INSTALLATION DETAIL 7

NO SCALE

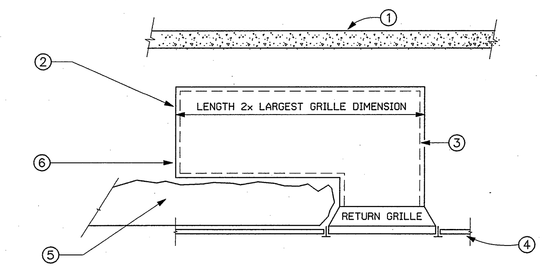

LEGEND:

1. STRUCTURE
2. 24X12 DUCT (EXCEPT AS NOTED)
3. 1" ACOUSTICAL LINER
4. CEILING
5. BAT OR SOUND INSULATION WHERE APPLICABLE
6. OPEN TO PLENUM OR CONNECT TO RETURN DUCT SYSTEM AS SHOWN ON PLANS

SOUND TRAP AT RETURN GRILLES 8

NO SCALE

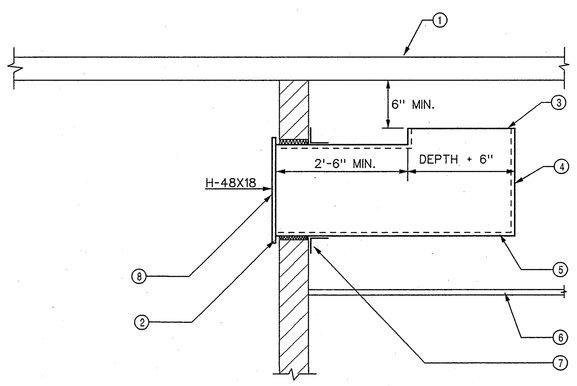

LEGEND:

1. STRUCTURE
2. SEALANT ALL AROUND
3. DUCT-OPEN ON TOP
4. 1" ACOUSTICAL LINER
5. DUCT SIZE AS INDICATED ON FLOOR PLAN
6. CEILING
7. SHEETMETAL SAFE-OFF ALL AROUND
8. BLADES TURNED UP

TRANSFER DUCT 11

NO SCALE

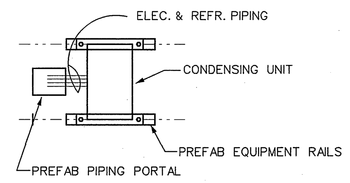

ROOFTOP CONDENSER INSTALLATION 12

NO SCALE

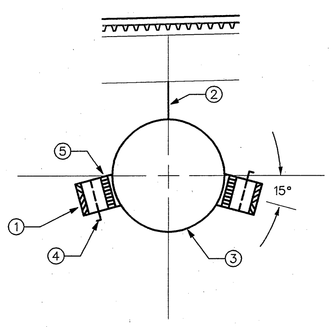

LEGEND:

1. SUPPLY AIR REGISTER (SEE PLAN FOR SIZE)
2. HANGER, PROVIDE LATERAL SUPPORT
3. SPIRAL DUCT (SEE PLAN FOR SIZE)
4. MANUAL VOLUME DAMPER (OPPOSED BLADE)
5. EQUALIZING GRID

SPIRAL DUCT 9

NO SCALE

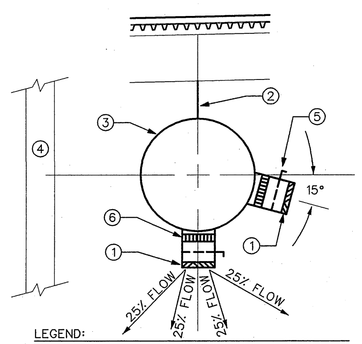

LEGEND:

1. SUPPLY AIR REGISTER (SEE PLAN FOR SIZE)
2. HANGER, PROVIDE LATERAL SUPPORT
3. SPIRAL DUCT (SEE PLAN FOR SIZE)
4. OUTSIDE WALL
5. MANUAL VOLUME DAMPER (OPPOSED BLADE)
6. EQUALIZING GRID

SPIRAL DUCT 10

NO SCALE

RECEIVED
MAY 08 2006
INTEGRA CONSTRUCTION, INC.

Stevens&Wilkinson
STEVENS & WILKINSON STANG & NEWBOW, INC.
ARCHITECTURE ENGINEERING INTERIORS
100 PEACHTREE STREET NW, SUITE 2500
ATLANTA, GA 30303
P 404.522.8888
F 404.521.6204
WWW.SW-SN.COM

idea|span
linking knowledge and design
A STEVENS & WILKINSON COMPANY
100 PEACHTREE STREET NW, SUITE 2400
ATLANTA, GA 30303
P 404.522.8899
F 404.521.6343
www.idea-span.com

■ SUBMITTALS

DATE	DESCRIPTION
05.08.06	PRICING / PERMIT SET

■ REVISIONS

DATE	DESCRIPTION

□ APPROVED FOR CONSTRUCTION
■ NOT APPROVED FOR CONSTRUCTION

THIS DRAWING IS THE PROPERTY OF STEVENS & WILKINSON STANG & NEWDOW, INC. UNAUTHORIZED USE OF ANY KIND, INCLUDING USE ON OTHER PROJECT IS PROHIBITED.

© STEVENS & WILKINSON STANG & NEWDOW, INC.

■ PROJECT NUMBER: 06041.00
■ DATE: 05.08.06
■ FILE: F:/PROJECTS/06041.00/DESIGN

cingular WIRELESS
PUEBLO, COLORADO

HVAC DETAILS

M7.2

POWER INDUCTION UNIT SCHEDULE (PIU,PIU-C)

NOTES:
1. PIU=PARALLEL FAN,VARIABLE VOLUME
2. PIU-C=SERIES FAN, CONSTANT VOLUME
3. ARI STD.880 RATED & CERTIFICATION REQUIRED FOR PERFORMANCE & NOISE
4. INCLUDE HEATING COIL IN INTERNAL S.P.
5. SEE SPECIFICATIONS FOR NOISE CLASS (NC CLASS) AND OTHER REQUIREMENTS
6. FAN BASED ON MEDIUM SPEED
7. PROVIDE OPTIONAL SOUND ATTENUATOR (FIELD INSTALLED)
8. EACH PIU SHALL BE INTERLOCKED WITH THEIR ASSOCIATED ROOFTOP UNIT (RTU) TO SHUT DOWN ON ACTIVATION OF ITS RTU SMOKE DETECTOR.
9. SELECTIONS BASED ON TRANE

SYMBOL	PIU	PIU-C	NC.CLASS	FAN DATA			PRIMARY AIR DATA				HEATING COIL DATA						COMMENTS
				CFM	E.S.P. IN.WG.	MAX. HP.	CFM MAX.	CFM. MIN.	MAX. AIR PD.IN.WG. MAX.CFM.	MIN. DUCT SIZE	ENT. AIR TEMP. °F	MIN. MBH CAPACITY	COIL TYPE ELEC.	COIL TYPE WATER	ELECTRIC TOTAL KW.	ELECTRIC NO. STEPS	WATER GPM	
PIU-7-1	--	X	30										X	--			--	
PIU-7-2	--	X	30										X	--			--	
PIU-7-3	--	X	30										X	--			--	
PIU-7-4	--	X	30										X	--			--	
PIU-8-1	--	X	30										X	--			--	
PIU-8-2	--	X	30										X	--			--	
PIU-8-3	--	X	30										X	--			--	
PIU-8-4	--	X	30										X	--			--	
PIU-9-1	--	X	30										X	--			--	
PIU-9-2	--	X	30										X	--			--	
PIU-9-3	--	X	30										X	--			--	
PIU-9-4	--	X	30										X	--			--	
PIU-9-5	--	X	30										X	--			--	
PIU-10-1	--	X	30										X	--			--	
PIU-10-2	--	X	30										X	--			--	
PIU-10-3	--	X	30										X	--			--	
PIU-10-4	--	X	30										X	--			--	
PIU-10-5	--	X	30										X	--			--	
PIU-10-6	--	X	30										X	--			--	
PIU-15-1	--	X	30										X	--			--	
PIU-15-2	--	X	30										X	--			--	
PIU-15-3	--	X	30										X	--			--	
PIU-15-4	--	X	30										X	--			--	

DRY COOLER SCHEDULE

IDENT.	NOMINAL CFM	FANS NO.	FANS HP	PUMP GPM	PUMP FT/HD	PUMP HP	MANF.	MODEL NO.	COMMENTS
DRY-1	19900	3	3/4	54.0	71.0	2.0	LIEBERT	DDSO-260A	①② ④⑤⑥ ⑧
DRY-2	19900	3	3/4	54.0	71.0	2.0	LIEBERT	DDSO-260A	① ③④⑤⑥⑦⑧

NOTES:
① PROVIDE PUMP PACKAGE
② MATCH WITH CRAC-1
③ MATCH WITH CRAC-2
④ PROVIDE 8.8 GALLON EXPANSION TANK
⑤ PROVIDE DISCONNECT
⑥ PROVIDE 14" HIGH PREFAB EQUIPMENT SUPPORTS AND PIPING PORTAL
⑦ STANDBY UNIT
⑧ PROVIDE FAN CYCLING WITH PUMP CONTROL

MDF ROOM AIR CONDITIONING UNIT SCHEDULE (OWNER SUPPLIED)

SYMBOL	CFM	H.P.	E.S.P.	COOLING COIL EAT °F DB	COOLING COIL EAT °F WB	COOLING COIL TOTAL MBH	COOLING COIL SEN. MBH	HUMIDIFIER LBS/HR	REHEAT KW	GLYCOL GPM	GLYCOL EWT °F	GLYCOL LWT °F	COMMENTS
CARC-1	8400	3.0	0.5	75.0	62.5	172.2	161.3	17.4	25	54	115.0	105.1	① ③④⑤ ⑦
CARC-2	8400	3.0	0.5	75.0	62.5	172.2	161.3	17.4	25	54	115.0	105.1	②③④⑤⑥⑦

NOTES:
① MATCH WITH DRY-1
② MATCH WITH DRY-2
③ EXISTING LIEBERT GLYCOL COOLED AC UNIT, MODEL DH192G WITH ELECTRIC REHEAT, CONDENSATE PUMP, SMOKE DETECTOR, AND INFRARED HUMIDIFIER
④ PROVIDE FLOOR STAND WITH TURNING VANE
⑤ INTERFACE CONTROLS WITH TRANE TRACER BAS
⑥ STAND-BY AC UNIT
⑦ CAPACITIES BASED ON 40% ETHYLENE GLYCOL SOLUTION AT 115°F AVERAGE SOLUTION TEMPERATURE

ROOFTOP AIR CONDITIONING UNIT SCHEDULE (PREPURCHASED)

SYMBOL	AREA SERVED	FAN AND MOTOR CFM	FAN AND MOTOR ESP (IN.) ②	FAN AND MOTOR HP	OUTSIDE AIR MIN. CFM	OUTSIDE AIR MAX. CFM	COOLING SECTION TOTAL MBH	COOLING SECTION SENS. MBH	COOLING SECTION AIR TEMP (°F) EAT DB	EAT WB	LAT DB	LAT WB	HEATING SECTION MBH OUTPUT	MBH INPUT	MINIMUM POWER EXHAUST CFM / S.P. (IN)	MFR.	MODEL NUMBER	COMMENTS
RTU-1		6900	1.0	7.5	1340	6900	168.9	168.9	78.4	59.3	55.1	50.9	230.4	283.9	5000 / 0.3	TRANE	YCD210	① ③ ⑥ ⑧⑨⑩⑪⑫⑬⑭ ⑯⑰⑱
RTU-2		4600	1.0	5.0	500	4600	100.8	100.8	78.6	58.1	58.4	50.7	164.3	202.8	1350 / 0.3	TRANE	YSC120	① ③ ⑥⑦⑧⑨⑩⑪⑫⑬⑭ ⑯⑰
RTU-3		4600	1.0	5.0	500	4600	100.8	100.8	78.6	58.1	58.4	50.7	164.3	202.8	1350 / 0.3	TRANE	YSC120	① ③ ⑥⑦⑧⑨⑩⑪⑫⑬⑭ ⑯⑰
RTU-4		8700	1.0	7.5	1340	8700	190.3	190.3	78.0	59.1	57.3	51.7	262.8	324.5	2250 / 0.3	TRANE	YCD240	① ③ ⑥⑦⑧⑨⑩⑪⑫⑬⑭ ⑯⑰
RTU-5		9000	1.0	7.5	1720	9000	222.2	218.2	78.4	59.3	54.9	50.7	262.8	324.5	8000 / 0.3	TRANE	YCD300	① ③ ⑤ ⑧⑨⑩⑪⑫⑬ ⑮⑯ ⑱
RTU-6		9000	1.0	7.5	1720	9000	222.2	218.2	78.4	59.3	54.9	50.7	262.8	324.5	8000 / 0.3	TRANE	YCD300	① ③ ⑤ ⑧⑨⑩⑪⑫⑬ ⑮⑯ ⑱
RTU-7		2400	1.0	2.0	640	2400	63.4	63.4	84.9	61.7	58.8	52.7	98.6	121.7	600 / 0.3	TRANE	YSC072	① ④⑤ ⑦⑧⑨⑩⑪⑫⑬⑭ ⑯
RTU-8		3000	1.0	3.0	640	3000	79.8	79.8	82.9	58.9	56.9	49.4	131.4	162.2	1350 / 0.3	TRANE	YSC090	① ④⑤ ⑦⑧⑨⑩⑪⑫⑬⑭ ⑯
RTU-9		6600	1.0	5.0	620	6600	144.9	144.9	78.9	57.3	58.4	49.7	230.4	283.9	2250 / 0.3	TRANE	YCD180	① ④⑤ ⑦⑧⑨⑩⑪⑫⑬⑭ ⑯
RTU-10		7000	1.0	7.5	1800	7000	184.1	184.1	83.3	61.3	57.9	52.5	230.4	283.9	2250 / 0.3	TRANE	YCD210	① ④⑤ ⑦⑧⑨⑩⑪⑫⑬⑭ ⑯
RTU-11		9000	1.0	7.5	1720	9000	222.2	218.2	78.4	59.3	54.9	50.7	262.8	324.5	8000 / 0.3	TRANE	YCD300	① ③ ⑤ ⑧⑨⑩⑪⑫⑬⑭ ⑯ ⑱
RTU-12		9000	1.0	7.5	1720	9000	222.2	218.2	78.4	59.3	54.9	50.7	262.8	324.5	8000 / 0.3	TRANE	YCD300	① ③ ⑤ ⑧⑨⑩⑪⑫⑬⑭ ⑯ ⑱
RTU-13		6000	1.0	5.0	2000	6000	152.2	144.2	83.3	61.3	60.2	52.8	230.4	283.9	5000 / 0.3	TRANE	YCD180	① ③ ⑤ ⑧⑨⑩⑪⑫⑬⑭ ⑯ ⑱
RTU-14		5000	1.0	5.0	500	5000	111.1	111.1	77.3	56.0	55.8	47.7	164.7	202.8	5000 / 0.3	TRANE	YCD150	① ③ ⑤ ⑧⑨⑩⑪⑫⑬⑭ ⑯ ⑱
RTU-15		2500	1.0	2.0	400	2500	61.8	61.8	82.2	60.9	57.9	52.5	98.6	121.7	600 / 0.3	TRANE	YSC072	① ④⑤ ⑦⑧⑨⑩⑪⑫⑬⑭ ⑯
RTU-16		4900	1.0	5.0	960	4900	117.7	108.5	78.9	60.1	57.5	51.8	164.7	202.8	5000 / 0.3	TRANE	YCD150	① ③ ⑥ ⑧⑨⑩⑪⑫⑬⑭ ⑯⑰⑱
RTU-17		4600	1.0	5.0	500	4600	100.8	100.8	78.6	58.1	58.4	50.7	164.3	202.8	1350 / 0.3	TRANE	YSC120	① ③ ⑥⑦⑧⑨⑩⑪⑫⑬ ⑮⑯⑰
RTU-18		4600	1.0	5.0	500	4600	100.8	100.8	78.6	58.1	58.4	50.7	164.3	202.8	1350 / 0.3	TRANE	YSC120	① ③ ⑥⑦⑧⑨⑩⑪⑫⑬ ⑮⑯⑰
RTU-19		6400	1.0	5.0	960	6400	140.9	140.9	77.9	59.1	57.3	51.7	230.4	283.9	2250 / 0.3	TRANE	YCD180	① ③ ⑥⑦⑧⑨⑩⑪⑫⑬⑭ ⑯⑰

NOTES:
① HEATING BASED ON NATURAL GAS FUEL SOURCE
② SCHEDULED E.S.P. VALUES INCLUDE LOSSES IN SUPPLY AND RETURN AIR SYSTEMS EXTERNAL TO THE AIR UNITS
③ CONSTANT VOLUME UNIT
④ BY-PASS TYPE VARIABLE VOLUME UNIT. (BYPASS DAMPER FOR STABLE FAN OPERATION)
⑤ PREFABRICATED 14" HIGH ROOF CURB WITH VIBRATION ISOLATION BASE (1" DEFLECTION)
⑥ PREFABRICATED 24" HIGH ROOF CURB WITH VIBRATION ISOLATION BASE (1" DEFLECTION)
⑦ DOWNFLOW ECONOMIZER WITH TRANE STANDARD POWER EXHAUST ACCESSORY
⑧ INSTALL SMOKE DETECTORS IN RETURN DUCT. DETECTORS PROVIDED BY DIV. 16, INSTALLED BY DIV. 15
⑨ CAPACITIES BASED ON 100°F AMBIENT TEMPERATURE
⑩ PROVIDE DISCONNECT
⑪ PROVIDE THERMAL EXPANSION VALVE REFRIGERATION CONTROL
⑫ PROVIDE FACTORY INSTALLED TOOL-LESS HAIL GUARDS
⑬ INTERFACE WITH TRANE TRACER BUILDING AUTOMATION SYSTEM
⑭ PROVIDE OVERSIZED MOTOR (SUPPLY FAN)
⑮ PROVIDE HIGH STATIC DRIVE ACCESSORY (SUPPLY FAN)
⑯ PROVIDE RELIA TEL OPTIONS MODULE, DISCHARGE AIR SENSING, CLOGGED FILTER SWITCH, FAN FAILURE SWITCH, AND FROSTAT
⑰ PROVIDE FLUE STACK, EQUAL TO TYCURB FLUE STACK "TFS"
⑱ DOWNFLOW ECONOMIZER WITH CANFAB "MODULATING POWER EXHAUST ECONOMISER" ACCESSORY

COMPUTER ROOM AIR CONDITIONER SCHEDULE (PREPURCHASED)

SYMBOL	AREA SERVED	MFGR	AIR COOLED CONDENSING UNIT (CU) MODEL	TOTAL MBH	SENS. MBH	ENT. AIR DB (F°)	ENT. AIR RH (%)	AMBIENT (F°)	COMPUTER ROOM UNIT (CRAC) SYMBOL	MODEL	TYPE	CFM	ESP (IN)	HP	REHEAT KW	REHEAT STAGES	HUMIDIFIER LBS/HR	NOTES
CU-3	IDF CLOSET	LIEBERT	PFC027A	23.6	18.3	75	50	100	CRAC-3	MMD24	⑤	800	0.3	0.5	6.3	1	4.3	①②③④⑥⑦⑧
CU-4	IDF CLOSET	LIEBERT	PFC027A	23.6	18.3	75	50	100	CRAC-4	MMD24	⑤	800	0.3	0.5	6.3	1	4.3	①②③④⑥⑦⑧

NOTES:
① E.S.P. (EXTERNAL STATIC PRESSURE) IS ANTICIPATED LOSSES BEYOND THE AIR HANDLING UNIT
② PROVIDE 14" HIGH EQUIPMENT RAILS (EQUAL TO PATE ES-5) AND PIPING PORTAL (EQUAL TO PATE PCC-1) AT CONDENSING UNIT
③ MANUFACTURER SHALL PROVIDE A REFRIGERANT PIPING DIAGRAM APPROVED BY THE FACTORY FOR TYPICAL SYSTEMS SHOWING COMPONENTS SUCH AS SUCTION LINE ACCUMULATOR, SOLENOID VALVE, ETC. AS REQUIRED AND RECOMMEND PIPE SIZES FOR PROPER OPERATION
④ CAPACITIES BASED ON LOW FAN SPEED
⑤ SPLIT SYSTEM EVAPORATOR SUPPLY & RETURN AIR DUCTED, OUTDOOR PROP FAN CONDENSING UNIT
⑥ PROVIDE STEAM HUMIDIFIER, ELECTRIC REHEAT, CONDENSATE PUMP, STARTER/DISCONNECT, AND LIEBERT "MINI-MATE2" MICROPROCESSOR CONTROL WITH THERMOSTAT. INTERFACE WITH TRANE TRACER BAS.
⑦ PROVIDE LOW AMBIENT CONTROLS. UNIT SHALL OPERATE DOWN TO -30 DEG F AMBIENT TEMPERATURE
⑧ CONDENSER COIL WITH HAIL GUARDS

RECEIVED
MAY 0 8 2006
INTEGRA CONSTRUCTION, INC.

Stevens&Wilkinson
STEVENS & WILKINSON STANG & NEWDOW, INC.
ARCHITECTURE ENGINEERING INTERIORS
100 PEACHTREE STREET NW, SUITE 2500
ATLANTA, GA 30303
P 404.522.8888
F 404.521.6204
WWW.SW-SN.COM

idea|span
linking knowledge and design
A STEVENS & WILKINSON COMPANY
100 PEACHTREE STREET NW, SUITE 2400
ATLANTA, GA 30303
P 404.522.8899
F 404.521.6343
www.idea-span.com

■ SUBMITTALS

DATE	DESCRIPTION
05.08.06	PRICING / PERMIT SET

■ REVISIONS

DATE	DESCRIPTION

□ APPROVED FOR CONSTRUCTION
■ NOT APPROVED FOR CONSTRUCTION

THIS DRAWING IS THE PROPERTY OF STEVENS & WILKINSON STANG & NEWDOW, INC. UNAUTHORIZED USE OF ANY KIND, INCLUDING USE ON OTHER PROJECT IS PROHIBITED.
©STEVENS & WILKINSON STANG & NEWDOW, INC.

■ PROJECT NUMBER: 06041.00
■ DATE: 05.08.06
■ FILE: F:/PROJECTS/06041.00/DESIGN

cingular WIRELESS
PUEBLO, COLORADO

HVAC SCHEDULES

M8.1

AIR COOLED CONDENSING UNIT SCHEDULE (PREPURCHASED)

SYMBOL	LOCATION	MIN. TOTAL MBH	MIN. SENS. MBH	MAX SUCTION TEMP AT COMP. F	O.A. TEMP° F	MIN EER	MCA	COMPRES. RLA	COMPRES. NO	CONDENSER FAN MOTOR (HP)	CONDENSER FAN MOTOR NO.	COMMENTS
CU-1	ROOF	175.3	118.9	45.0	100.0	9.7	6.0	13.2	2	½	2	①②③④⑤⑥⑦⑧
CU-2	ROOF	175.3	118.9	45.0	100.0	9.7	6.0	13.2	2	½	2	①②③④⑤ ⑦⑧⑨

NOTES:
① STARTERS REQUIRED SHALL BE FURNISHED BY MANUFACTURER OF EQUIPMENT.
② CONDENSING UNIT SHALL HAVE DUAL COMPERSSORS AND HOT GAS BY PASS.
③ PROVIDE 14" PREFAB EQUIPMENT RAILS (EQUAL TO PATE ES-5) AND PIPING PORTAL (EQUAL TO PATE PCC-1)
④ PROVIDE LOW AMBIENT CONTROLS, UNIT SHALL OPERATE DOWN TO -30° AMBIENT TEMPERATURE
⑤ MANUFACTURER SHALL PROVIDE A REFRIGERANT PIPING DIAGRAM APPROVED BY THE FACTORY SHOWING COMPONENTS SUCH AS SUCTION LINE ACCUMULATOR, SOLENOID VALVE, ETC. AS REQUIRED AND RECOMMEND PIPE SIZES FOR PROPER OPERATION
⑥ MATCH WITH AC-1
⑦ PROVIDE HAIL GUARDS
⑧ PROVIDE DDC COMMUNICATION INTERFACE
⑨ MATCH WITH AC-2

ELECTRIC HEATER SCHEDULE

SYMBOL	TYPE	WATTS	CFM	HP	MFR	MODEL	COMMENTS
BB-A	BASEBOARD	150/FT	--	--	BERKO	ALS3-10-150-F-27-1-S-TDS	①②③
BB-B	BASEBOARD	100/FT	--	--	BERKO	ALS3-4-100-F-27-1-S-TDS	①②③
BB-C	BASEBOARD	100/FT	--	--	BERKO	ALS3-2-100-F-27-1-S-TDS	①②③
EUH-1	CEIL. MNTD.						
EUH-2	CEIL. MNTD.						
EUH-3	CEIL. MNTD.						
EUH-4	CEIL. MNTD.						
EUH-5	RADIANT	6000	--	--	BERKO	VRP3-49S	④⑤⑦
EUH-6	RADIANT	6000	--	--	BERKO	VRP3-49S	④⑤⑦
EUH-7	RADIANT	6000	--	--	BERKO	VRP3-49S	④⑤⑦
EUH-8							

NOTES:
① PROVIDE ALL TRIM ACCESSORIES REQUIRED FOR A CONTINUOUS INSTALLATION
② PROVIDE DISCONNECT SWITCH, LINE VOLTAGE THERMOSTAT, FRONT INLET, AND PENCIL PROOF GRILLE
③ FINISH IS TO BE BAKED ENAMEL IN A COLOR CHOSEN BY THE ARCHITECT. SUBMIT COLOR CHART TO THE ARCHITECT
④ PROVIDE ON/OFF SWITCH WITH 0 TO 30 MINUTE TIMER (OUTDOOR RATED)
⑤ HEATER SHALL BE DESIGNED FOR OUTDOOR CONDUIT MOUNTING.
⑥ UNIT TO BE MOUNTED IN CEILING GRID. PROVIDE UNIT MOUNTED THERMOSTAT & INTEGRAL DISCONNECT SWITCH.
⑦ 90° SYMMETRICAL REFLECTORS
⑧ PROVIDE T-BAR CEILING ADAPTOR

DIRECT EXPANSION AIR HANDLING UNIT SCHEDULE (PREPURCHASED)

SYMBOL	CFM	O.A. CFM	MAX. FACE VEL. FPM	FAN HP	E.S.P (IN.)	E.A.T.(°F) DB	E.A.T.(°F) WB	L.A.T.(°F) DB	L.A.T.(°F) WB	MIN. TOTAL MBH	MIN. SENSIBLE MBH	COMMENTS
AC-1	6000	0	500	3	1.6	80.0	67.0	63.3	59.4	175.3	118.9	①②③④⑤
AC-2	6000	0	500	3	1.6	80.0	67.0	63.3	59.4	175.3	118.9	① ③④⑤⑥⑦

NOTES:
① E.S.P. INCLUDES FILTERS.
② MATCH WITH CU-1
③ HORIZONTAL CABINET (VERTICAL RETURN/HORIZONTAL SUPPLY AIR FLOW)
④ PROVIDE ISOLATORS
⑤ PROVIDE WALL MOUNTED THERMOSTAT, INTERFACE WITH TRANE TRACER BAS
⑥ STAND-BY AC UNIT
⑦ MATCH WITH CU-2

MOD SCHEDULE

SYMBOL	MAX. CFM	SERVICE	SIZE	TYPE	COMMENTS
MOD-7-1		RTU-7		BYPASS	①②
MOD-8-1		RTU-8		BYPASS	①②
MOD-9-1		RTU-9		BYPASS	①②
MOD-10-1		RTU-10		BYPASS	①②
MOD-15-1		RTU-15		BYPASS	①②

NOTES:
① MAXIMUM AIR PRESSURE DROP (IN.WG.) SHALL NOT EXCEED 0.03 INCHES
② COORDINATE EXACT SIZE WITH EQUIPMENT FURNISHED

GRILLES, REGISTERS, & DIFFUSERS SCHEDULE

TYPE	SERVICE	MANUFACTURER & MODEL NO.	VOLUME DAMPER	FRAME	FINISH	MATERIAL	DESCRIPTION	REMARKS
A	CEILING DIFFUSER	TITUS TMS	-	LAY-IN	WHITE ENAMEL	STEEL	24 X 24 MODULAR CONE FACE DIFFUSER WITH ROUND NECK, SIZE AS INDICATED ON FLOOR PLAN	①
B	CEILING DIFFUSER	TITUS TMR	-	COLLAR MOUNTED	WHITE ENAMEL	STEEL	ROUND MODULAR CONE FACE DIFFUSER WITH ROUND NECK, SIZE AS INDICATED ON FLOOR PLAN	①
C	CEILING DIFFUSER	TITUS TMS-AA	-	LAY-IN	WHITE ENAMEL	ALUMINUM	24 X 24 MODULAR CONE FACE DIFFUSER WITH ROUND NECK, SIZE AS INDICATED ON FLOOR PLAN	①
D	CEILING DIFFUSER	TITUS TMS-AA	-	SURFACE MOUNTED	WHITE ENAMEL	ALUMINUM	12 X 12 MODULAR CONE FACE DIFFUSER WITH ROUND NECK, SIZE AS INDICATED ON FLOOR PLAN	①
E	SUPPLY REGISTER	TITUS 112 RS	OBD	SURFACE MOUNTED	WHITE ENAMEL	STEEL	1-1/4" BLADE SPACING, DOUBLE DEFLECTION, INDIVIDUALLY ADJUSTABLE AIRFOIL BLADES, FRONT BLADES PARALLEL TO THE SHORT DIMENSION. 20 GAUGE BORDER.	
F	-	-	-	-	-	-	-	NOT USED
G	RETURN GRILLE	TITUS 50 F	-	LAY-IN	WHITE ENAMEL	ALUMINUM	24 X 24 MODULE, ½" X ½" X ½" EGGCRATE GRID	①
H	RETURN GRILLE	TITUS 23 RL	-	SURFACE MOUNTED	WHITE ENAMEL	STEEL	RETURN GRILLE WITH ¾" BLADE SPACING, 45° FIXED DEFLECTION BLADES PARALLEL TO THE HORIZONTAL DIMENSION	②
I	RETURN GRILLE	TITUS 50 F	-	SURFACE MOUNTED	WHITE ENAMEL	ALUMINUM	12 X 12 MODULE, ½" X ½" X ½" EGGCRATE GRID	①
J	-	-	-	-	-	-	-	NOT USED
K	SUPPLY REGISTER	TITUS 250	OBD	SURFACE MOUNTED	WHITE ENAMEL	STEEL	SURFACE MOUNT SUPPLY REGISTER, SPECIAL "S4" 4-WAY THROW PATTERN, 25%-25%-25%-25% VOLUME SPLIT, FULLY ADJUSTABLE CURVED BLADES, PROVIDE OPPOSED BLADE DAMPER AND EQUALIZING GRID	
L	SUPPLY DIFFUSER	THERMAFUSER TF-HC	-	LAY-IN	WHITE ENAMEL	STEEL	THERMAFUSER TF-HC, SHALL BE SET TO MAINTAIN 70°F (ADJUSTABLE) ROOM TEMPERATURE	①

NOTES:
① FRAME SHALL BE COMPATIBLE WITH THE CEILING GRID. COORDINATE
② PROVIDE CONCEALED REINFORCING MULLIONS FOR BLADE STABILITY

FAN SCHEDULE

SYMBOL	LOCATION	AREA SERVED	CFM	S.P. IN IN. WG.	RPM	HP	MFR	MODEL	DRIVE TYPE	COMMENTS
F-1	ROOF		1700	0.4	682	1/3	GREENHECK	CUBE-180-3	BELT	①② ④
F-2	ROOF		1850	0.4	706	1/3	GREENHECK	CUBE-180-3	BELT	①② ④
F-3	ROOF		930	0.4	1051	¼	GREENHECK	CUBE-121-4	BELT	①② ④
F-4	ROOF		1700	0.4	682	1/3	GREENHECK	CUBE-180-3	BELT	①② ④
F-5	ROOF		400	0.3	1249	1/15	GREENHECK	G-090-D	DIRECT	①② ④ ⑦⑧
F-6	ROOF		400	0.3	1249	1/15	GREENHECK	G-090-D	DIRECT	①② ④ ⑦⑧
F-7	ROOF		400	0.3	1249	1/15	GREENHECK	G-090-D	DIRECT	①② ④ ⑦⑧
F-8	ROOF									③④⑤⑥

NOTES:
① PROVIDE 14" HIGH PREFAB ROOF CURB
② BACKDRAFT DAMPER
③ PROVIDE 14" HIGH PREFAB ROOF CURB, CURB SHALL BE NON-COMBUSTIBLE FOR A SLOPED ROOF
④ PROVIDE DISCONNECT
⑤ PROVIDE GREASE TRAP WITH DRAIN CONNECTION AND GREASE BOX
⑥ HINGED CURB CAP KIT WITH CABLES
⑦ PROVIDE SOLID STATE SPEED CONTROLLER MOUNTED AT FAN, SCHEDULED CFM INDICATE INITIAL BALANCE
⑧ FAN SHALL BE CONTROLLED BY A THERMOSTAT SET AT 78°F (ADJUSTABLE)

RECEIVED
MAY 08 2006
INTEGRA CONSTRUCTION, INC.

S&W
Stevens&Wilkinson
STEVENS & WILKINSON STANG & NEWDOW, INC.
ARCHITECTURE ENGINEERING INTERIORS
100 PEACHTREE STREET NW, SUITE 2500
ATLANTA, GA 30303
P 404.522.8888
F 404.521.6204
WWW.SW-SN.COM

idea|span
linking knowledge and design
A STEVENS & WILKINSON COMPANY
100 PEACHTREE STREET NW, SUITE 2400
ATLANTA, GA 30303
P 404.522.8899
F 404.521.6343
www.idea-span.com

■ SUBMITTALS

DATE	DESCRIPTION
05.08.06	PRICING / PERMIT SET

■ REVISIONS

DATE	DESCRIPTION

□ APPROVED FOR CONSTRUCTION
■ NOT APPROVED FOR CONSTRUCTION

THIS DRAWING IS THE PROPERTY OF STEVENS & WILKINSON STANG & NEWDOW, INC. UNAUTHORIZED USE OF ANY KIND, INCLUDING USE ON OTHER PROJECT IS PROHIBITED.
© STEVENS & WILKINSON STANG & NEWDOW, INC.

■ PROJECT NUMBER: 06041.00
■ DATE: 05.08.06
■ FILE: F:/PROJECTS/06041.00/DESIGN

cingular WIRELESS
PUEBLO, COLORADO

HVAV SCHEDULES

M8.2

ABBREVIATIONS:

A OR AMP	AMPERES
AF	AMPERE FRAME
AFF	ABOVE FINISHED FLOOR
AFG	ABOVE FINISHED GRADE
AFR	ABOVE FINISHED ROOF
AIC	AMPERES INTERRUPTING CAPACITY
AL	ALUMINUM
AM	AMMETER
ARC	ARCHITECT OR ARCHITECURAL
AS	AMMETER SELECTOR SWITCH
ASYM	ASYMMETRICAL
AT	AMPERE TRIP
AU	AIR HANDLING UNIT
AUTO	AUTOMATIC
AWG	AMERICAN WIRE GAUGE
B	BOILER
BFG	BELOW FINISHED GRADE
BKR	BREAKER
C	CONDUIT
CAT	CATALOG OR CATEGORY
CATV	COMMUNITY ANTENNA TELEVISION
CB	CIRCUIT BREAKER
CKT	CIRCUIT
CLG	CEILING
COMM	COMMUNICATIONS
CONT	CONTINUATION
CT	CURRENT TRANSFORMER OR COOLING TOWER
DISC	DISCONNECT SWITCH
DIV	DIVISION
DWG	DRAWING
EF	EXHAUST FAN
EMS	ENERGY MANAGEMENT SYSTEM
EMT	ELECTRICAL METALLIC TUBING
EPO	EMEGENCY POWER OFF
EUH	ELECTRIC UNIT HEATER
EWH	ELECTRIC WALL HEATER
EXIST	EXISTING
FACP	FIRE ALARM CONTROL PANEL
FBO	FURNISHED BY OTHERS
FCU	FAN COIL UNIT
FSD	FIRE/SMOKE DAMPER
FWE	FURNISHED WITH EQUIPMENT
G OR GND	GROUND
GF	GROUND FAULT INTERRUPTER TYPE RECEPTACLE
GRS	GALVANIZED RIGID STEEL CONDUIT
GUH	GAS UNIT HEATER
HT	HEIGHT
HP	HORSEPOWER
ID	IDENTIFICATION
IG	ISOLATED GROUND
J OR JBOX	JUNCTION BOX
KVA	KILOVOLT-AMPERES
KW	KILOWATTS
KWHD	KILOWATT HOUR DEMAND METER
LSIG	LONG TIME. SHORT TIME. INSTANTANEOUS & GROUND FAULT
MCB OR MB	MAIN CIRCUIT BREAKER
MH	MANHOLE OR METAL HALIDE
MLO	MAIN LUGS ONLY
MRS	MOTOR RATED SWITCH
MT OR MTD	MOUNT OR MOUNTED
NC	NORMALLY CLOSED
NEC	NATIONAL ELECTRICAL CODE
NEMA	NATIONAL ELECTRICAL MANUFACTURER ASSOCIATION
NO	NORMALLY OPEN OR NUMBER (#)
NTS	NOT TO SCALE
OC	ON CENTER
P	POLES OR PHASE
PNL	PANELBOARD
PT	POTENTIAL TRANSFORMER
RECEPT	RECEPTACLE
RGS	RIGID GALVANIZED STEEL
RMS	ROOT MEAN SQUARE
RTU	ROOF TOP UNIT
R/T	RAINTIGHT
SDBC	SOFT DRAWN BARE COPPER
SF	SUPPLY FAN
SQ	SQUARE
SWBD	SWITCHBOARD
SPEC	SPECIFICATIONS
TYP	TYPICAL
UG	UNDERGROUND
UL	UNDERWRITER'S LABORATORIES
ULSE	UL SERVICE ENTRANCE LABEL
UNO	UNLESS NOTED OTHERWISE
V	VOLTS
VM	VOLTMETER
VS	VOLTMETER SELECTOR SWITCH
W	WATTS OR WIDTH OR WIRE
WH	WATER HEATER
WP	WEATHER PROOF
WSHP	WATER SOURCE HEAT PUMP
XFMR	TRANSFORMER

SYMBOL DESCRIPTION

HA-1.3.5 / #10 / PHASE / NEUTRAL / B / d — HA-1.3.5 ADJACENT TO ARROW INDICATES HOMERUN OF CIRCUITS 1.3&5 TO PANEL "HA." MARKS ACROSS RACEWAYS FOR LIGHTING AND RECEPTACLE LOADS INDICATE THE NUMBER OF #12 AWG PHASE AND #12 AWG NEUTRAL CONDUCTORS IN RACEWAY. WHEN #10 IS SHOWN ADJACENT TO HOMERUN IT SHALL INDICATE THAT PHASE AND NEUTRAL CONDUCTOR ARE #10 AWG FOR ENTIRE BRANCH CIRCUIT, UNO. NO MARKS ACROSS RACEWAY INDICATES ONE PHASE AND ONE NEUTRAL CONDUCTORS. EQUIPMENTGROUNDING CONDUCTORS ARE NOT SHOWN. HOWEVER, GROUNDING CONDUCTORS SHALL BE PROVIDED IN ALL RACEWAYS. LOWER CASE LETTER ADJACENT TO DEVICE INDICATES SWITCHLEG DESIGNATION. CAPITAL LETTER BESIDE LIGHT FIXTURE INDICATES FIXTURE TYPE. MULTI-CIRCUIT HOMERUNS TO BE 1"C. UNO. SINGLE CIRCUIT HOMERUNS TO BE ¾"C. UNO. (—•) DENOTES ISOLATED GROUND WIRE.

B OR B OR B OR B — FLUORESCENT LIGHT FIXTURE AND OUTLET BOX. LETTER INDICATES FIXTURE TYPE

B OR B OR B — EGRESS/EMERGENCY FLUORESCENT LIGHT FIXTURE AND OUTLET BOX. LETTER INDICATES FIXTURE TYPE.

C — WALL MOUNTED FLUORESCENT LIGHT FIXTURE AND OUTLET BOX. LETTER INDICATES FIXTURE TYPE

F18 R — CEILING OR WALL MOUNTED LIGHT FIXTURE AND OUTLET BOX. LETTER INDICATES FIXTURE TYPE.

OR — CEILING OR WALL MOUNTED EXIT SIGN AND OUTLET BOX. PROVIDE ARROWS INDICATED. SINGLE FACE OR DOUBLE FACE AS INDICATED BY SHADING

SIMPLEX RECEPTACLE. NEMA 5-20R. UNO.

SIMPLEX RECEPTACLE. NEMA 5-15R. UNO. MT 52"AFF OR 6" ABOVE COUNTER TOP

DUPLEX RECEPTACLE. NEMA 5-20R.
(IG INDICATES ISOLATED GROUND) (GF INDICATES GROUND FAULT INTERRUPTER TYPE).

QUAD RECEPTACLE. (2) NEMA 5-20R.

DUPLEX RECEPTACLE. CEILING MOUNTED. COORDINATE W/ LOCATION OF PROJECTOR.

QUADRAPLEX RECEPTACLE. EQUIPMENT RACK MOUNTED U.N.O.

DUPLEX RECEPTACLE. NEMA 5-20R. UNO. MT 52"AFF OR 6" ABOVE COUNTER TOP.

5-30R — WALL MOUNTED.SPECIAL PURPOSE SIMPLEX RECEPTACLE. NEMA TYPE INDICATED BY NOTE. PROVIDE MATCHING PLUG.

L5-30R — EQUIPMENT RACK MOUNTED SPECIAL PURPOSE SIMPLEX RECEPTACLE. NEMA TYPE INDICATED BY NOTE. PROVIDE MATCHING PLUG CONNECTOR BODY.

CAST FLOOR BOX WITH ONE NEMA 5-20R RECEPTACLE AND BLACK CARPET TILE COVERPLATE. UNO. WIREMOLD / WALKER SERIES 880CS1-1.

CAST FLOOR BOX WITH TWO NEMA 5-20R RECEPTACLES AND BLACK CARPET TILE COVERPLATE. UNO. WIREMOLD / WALKER SERIES 880CS2-1.

COMBINATION POWER AND DATA RAISED FLOOR BOX WITH TWO ISOLATED GROUND DUPLEX RECEPTACLES, TWO DUPLEX RECEPTACLES AND PROVISIONS FOR 8 DATA/VOICE OUTLETS. COORDINATE MODEL WITH RAISED FLOOR SUPPLIER WHO WILL FURNISH AND MOUNT BOX IN RAISED FLOOR.
SUBSCRIPTS: P = POWER ONLY. TWO ISOLATED GROUND DUPLEX RECEPTACLES: A/V = PROVIDED FOR A/V SYSTEM WITH BLANK INSERTS. COORDINATE WITH A/V CONTRACTOR.

S — SINGLE POLE SWITCH. SUBSCRIPT: L = LOCKING COVER. K = KEY TYPE

S_R — ROTARY TIMER SWITCH WITHOUT HOLD FEATURE. MARK CAT. #90008 OR APPROVED EQUAL.

S_3 — THREE-WAY SWITCH. SUBSCRIPT: K = KEY TYPE

S_M — MOTOR RATED SWITCH WITH OVERLOADS

S_4 — FOUR-WAY SWITCH

S_D^U — MOTORIZED SCREEN (UP-OFF-DOWN) CONTROL SWITCH

FLEXIBLE CONDUIT

—UE— CONCRETE ENCASED ELECTRICAL EMERGENCY POWER DUCT BANK

—UP— CONCRETE ENCASED ELECTRICAL POWER DUCT BANK

—UT— CONCRETE ENCASED TELEPHONE DUCT BANK

—CATV— CONCRETE ENCASED CATV DUCT BANK

RACEWAY INSTALLED CONCEALED IN RAISED FLOOR / OR WITHIN/BELOW SLAB

OR — RACEWAY INSTALLED CONCEALED ABOVE CEILING OR IN WALLS

3/4 " WIRING WHIP

RACEWAY INSTALLED EXPOSED

—E— RACEWAY FOR EMERGENCY CIRCUIT

CR — PROVIDE OUTLET ABOVE CEILING FOR OWNER FURNISHED DOOR CONTROL ACCESS SYSTEM. CR = CARD READER. KP = KEYPAD.

J OR J — 4X — JUNCTION BOX MOUNTED ABOVE CEILING OR WALL MOUNTED. WITH FLEXIBLE CONDUIT CONNECTION TO EQUIPMENT. SIZE AS REQUIRED BY NEC. 4X = NEMA ENCLOSURE TYPE (STAINLESS STEEL). ALL JUNCTION BOXES SHALL BE NEMA 1 UNO.

CONDUIT STUBBED UP 6" ABOVE CEILING & TURNED 90 DEGREES. TERMINATE WITH BUSHED OPENING.

WH — WATER HEATER: KW AND VOLTAGE AS INDICATED SUPPLIED BY MECHANICAL DIV WIRED BY ELECTRICAL DIVISION.

M — MOTOR OPERATED LOUVER. INSTALLED UNDER DIV 15. WIRED UNDER DIV 16 OF THE SPECS.

30/3/1 N — NON-FUSED SAFETY SWITCH: SWITCH AMPS / POLES / NEMA ENCLOSURE. ALL NON-FUSED SAFETY SWITCHES SHALL BE 30/3/1 UNO.

40/60/3/1 F — FUSED SAFETY SWITCH: FUSE RATING / SWITCH AMPS / POLES / NEMA ENCLOSURE.

1/3R — MAGNETIC STARTER (LOOSE MOUNTED MAGNETIC STARTER BY DIV. 15 WIRED BY DIV. 16) NEMA SIZE / NEMA ENCLOSURE. ALL MAGNETIC STARTERS ARE 1/1 UNO.

60/1/3R — COMBINATION STARTER/NONFUSED DISCONNECT SWITCH FURNISHED BY MECHANICAL DIVISION WIRED BY ELECTRICAL., SWITCH AMPS / NEMA SIZE / NEMA ENCLOSURE, ALL MAGNETIC STARTERS ARE 1/1 UNLESS NOTED OTHERWISE.

CB — CIRCUIT BREAKER IN NEMA ONE ENCLOSURE

2 — MOTOR. HORSEPOWER AS INDICATED BY NUMBER.

1/4 — MOTOR. FRACTIONAL HORSEPOWER. ¼ = HP

FLUSH WALL MOUNTED COMBINATION DATA/VOICE OUTLET. PROVIDE 2 GANG BOX WITH SINGLE GANG PLASTER RING. EXTEND 1" C FROM BOX TO ABOVE ACCESSIBLE CEILING OR DOWN TO RAISED FLOOR. TERMINATE CONDUIT WITH AN INSULATED BUSHING.

FLUSH WALL MOUNTED (UNO) DATA OUTLET. PROVIDE 1 GANG BOX WITH SINGLE GANG PLASTER RING. EXTEND 1"C FROM BOX TO ABOVE ACCESSIBLE CEILING OR DOWN TO RAISED FLOOR. TERMINATE CONDUIT WITH AN INSULATED BUSHING.

FLUSH FLOOR MOUNTED COMBINATION POWER/DATA/TELEPHONE ROUND PVC FLOOR BOX EQUAL TO WALKER SERIES 881 WITH CARPET FLANGE U.N.O. PROVIDE WALKER #881C20ABK COMBINATION COVER WITH DIVIDER.

4 PF — FLOOR POWER FEED TO WORKSTATION MODULAR FURNITURE. SURFACE MOUNT J.BOX TO SLAB BELOW RAISED FLOOR AND CONNECT MODULAR FURNITURE WHIP(S). PROVIDE GROMMETED HOLE IN RAISED FLOOR TO ROUTE THRU. NUMBER INDICATES QUANTITY OF WORKSTATIONS SERVED.

4 DF — FLOOR COMMUNICATIONS FEED TO WORKSTATION MODULAR FURNITURE. EXTEND FIRE RETARDANT 1½" FLEXIBLE CONDUIT FROM MODULAR FURNITURE TO BELOW RAISED FLOOR FOR COMMUNICATION WIRING. NUMBER INDICATES QUANTITY OF WORKSTATIONS SERVED.

4 PF — WALL POWER FEED TO WORKSTATION MODULAR FURNITURE. NUMBER INDICATES QUANTITY OF WORKSTATIONS SERVED.

4 DF — WALL COMMUNICATIONS FEED TO WORKSTATION MODULAR FURNITURE. EXTEND 1½" FLEXIBLE CONDUIT TO MODULAR FURNITURE J.BOX FOR COMMUNICATION WIRING. NUMBER INDICATES QUANTITY OF WORKSTATIONS SERVED.

M — WHITE, CEILING MOUNTED ULTRASONIC OCCUPANCY SENSOR. WATT STOPPER CAT. NO. WT-605. 24 VDC 27mA 600 SQ FT 360 DEGREE COVERAGE. LOCATE SENSORS IN CENTER OF SPACE. INSTALL PER MANUFACTURERS RECOMMENDATION.

C — CONTACTOR

CR — CONTROL RELAY

OR — FLUSH OR SURFACE MOUNTED. 277/480V. 3 PH.. 4W LIGHTING PANELBOARD. REFER TO PANEL SCHEDULES.

OR — FLUSH OR SURFACE MOUNTED. 120/208V. 3 PH.. 4W PANELBOARD. REFER TO PANEL SCHEDULES.

T — DRY TYPE TRANSFORMER. T = IDENTIFICATION. REFER TO SHEET NO. EP-3.1 FOR TRANSFORMER SCHEDULE

PC — PHOTOCELL. WALL MOUNTED 36" AFR

TVSS — TRANSIENT VOLTAGE SURGE SUPPRESSION DEVICE.

PUSHBUTTON STATION

CONDUIT UP / CONDUIT DOWN

EXOTHERMIC WELD CONNECTION

3/4" DIA. x10'-0" COPPER CLAD GROUND RODS SPACED MINIMUM 10'-0" MAXIMUM 80'-0" APART CONNECTED BY EXOTHERMIC WELD TO NO. 4/0 STRANDED BARE SOFT DRAWN COPPER WIRE.

G — GROUNDING ELECTRODE CONDUCTOR

EQUIPMENT GROUND BUS. WALL MOUNTED.

FACP — FIRE ALARM CONTROL PANEL. SURFACE MOUNTED

FAAP — FIRE ALARM ANNUNICATOR PANEL. FLUSH MOUNTED.

D — FIRE ALARM SMOKE DUCT DETECTOR. WITH REMOTE LED ON CEILING BELOW UNIT. CONTRACTOR SHALL REVIEW MECHANICAL PLANS IF THERE IS A QUANTITY DIFFERENCE IN MECHANICAL & ELECTRICAL PLANS. THE QUANTITIES SHOWN ON MECHANICAL SHALL GOVERN.

H — FIRE ALARM HEAT DETECTOR

S — FIRE ALARM SMOKE DETECTOR

S U — FIRE ALARM SMOKE DETECTOR. UNDER RAISED FLOOR

F — FLUSH WALL MOUNTED FIRE ALARM. VISUAL ONLY STROBE UNIT.

F — FLUSH WALL MOUNTED FIRE ALARM HORN WITH STROBE UNIT.

WP F — FLUSH WALL MOUNTED FIRE ALARM HORN. SUBSCRIPT: WP = WEATHERPROOF

F — FIRE ALARM PULL STATION.

FS — FIRE ALARM WATER FLOW SWITCH

TS — FIRE ALARM VALVE TAMPER SWITCH

PS — FIRE ALARM PRESSURE SWITCH

SD — SMOKE DAMPER

F — FIRE ALARM CONTROL RELAY

AI — FIRE ALARM ADDRESSABLE INPUT MODULE

—T—T— TELECOMMUNICATIONS CONDUIT

1 — NOTE KEYED TO DRAWING. NUMERAL INDICATES SPECIFIC NOTE

TR 1HR — TIMER. SPRING WOUND OVERRIDE. WALL MOUNTED 4'4"AFF. SUBSCRIPT: 1HR = ONE (1) HOUR; 6HR = SIX (6) HOUR

CM — CIRCUIT MONITOR. SWITCHBOARD MOUNTED

TEL/DATA BACK BOARD WITH J.BOX & #6AWG GROUND CONDUCTOR TO BUILDING SYSTEM GROUND. PROVIDE 8'FT. OF SLACK GROUND CONDUCTOR. 8"Hx3/4"Dx W(AS SHOWN). SEE SPECIFICATIONS FOR DETAILS.

PIR — OUTLET BOX FOR P.I.R. WITH 3/4"C TO BELOW RAISED FLOOR AND WIRING TO SECURITY BACKBOARD. EQUIPMENT BY OTHERS.

OUTLET BOX FOR CAMERA WITH MOTION DETECTOR, PROVIDE 1"C TO BELOW RAISED FLOOR AND WIRING TO SECURITY PANEL BACKBOARD. EQUIPMENT BY OTHERS.

PTZ — OUTLET BOX FOR PAN, TILT, ZOOM CAMERA WITH MOTION DETECTOR. PROVIDE 1"C TO BELOW RAISED FLOOR AND WIRING TO SECURITY BACKBOARD. EQUIPMENT BY OTHERS.

IC — OUTLET BOX FOR INTERCOM OUTLET WITH 3/4"C TO BELOW RAISED FLOOR AND WIRING TO INTERCOM BASE STATION. EQUIPMENT BY OTHERS.

CR — OUTLET BOX FOR CARD READER JUNCTION BOX WITH 3/4"C TO BELOW RAISED FLOOR AND WIRING TO SECURITY BACKBOARD. EQUIPMENT BY OTHERS.

DC — OUTLET BOX FOR DOOR CONTACT WITH 3/4" C TO BELOW RAISED FLOOR AND WIRING TO SECURITY BACKBOARD. EQUIPMENT BY OTHERS.

EL — 24V DC ELECTRIC STRIKE SUPPLIED BY GENERAL CONTRACTOR. PROVIDE 3/4" C TO BELOW RAISED FLOOR AND WIRING TO SECRUITY BACKBOARD. EQUIPMENT BY OTHERS.

PB — OUTLET BOX FOR REQUEST TO EXIT PUSHBUTTON WITH 3/4"C TO MAGNETIC LOCK AND 3/4"C TO BELOW RAISED FLOOR TO SECURITY BACKBOARD WITH WIRING. EQUIPMENT BY OTHERS.

CC — OUTLET BOX FOR CAMERA CONTROL WITH 2-2"C TO BELOW RIASED FLOOR AND POWER WIRING TO SECURITY BACKBOARD AND VIDEO COAX AND CAT 5E WIRING TO DVR RACK IN MDF. EQUIPMENT BY OTHERS.

MON — OUTLET BOX FOR MONITOR OUTLET WITH 3/4"C TO BELOW RAISED FLOOR AND VIDEO COAX WIRING TO DVR RACK IN MDF. EQUIPMENT BY OTHERS.

DVR — DIGITAL VIDEO RECORDER MOUNTED IN OWNER FURNISHED RACK WITH ACCESS TO RAISED FLOOR. EQUIPMENT BY OTHERS.

BLP — SECURITY CONTROL PANEL PROVIDED BY OTHERS.

GENERAL ELECTRICAL NOTES:

1. DRAWINGS SHOWING ELECTRICAL WORK ARE DIAGRAMMATIC. THE CONTRACTOR SHALL REFER TO ARCHITECTURAL, STRUCTURAL AND MECHANICAL DRAWINGS FOR GUIDANCE AS TO DIMENSIONS, CEILING HEIGHTS, DOOR SWINGS, ROOM FINISHES, ARCHITECTURAL DETAILS, AND LOCATIONS OF EQUIPMENT, PIPES, MECHANICAL SYSTEM EQUIPMENT AND OUTLETS, AND THE LIKE, AND SHALL:
   - A. INSTALL THE ELECTRICAL SYSTEMS WITHOUT INTERFERENCE WITH OBSTRUCTIONS.
   - B. LOCATE LIGHTING FIXTURES AS INDICATED ON REFLECTED CEILING PLANS AND INTERIOR DETAILS IN CORRECT RELATION TO FINISHED AREAS (MAKE MINOR ADJUSTMENTS IN FIXTURE LOCATIONS AS NECESSARY TO CLEAR OBSTRUCTIONS).
   - C. PROVIDE ADDITIONAL STEEL SUPPORTS FOR MOTOR CONTROLLERS, FIXTURES, RACEWAYS, CABINETS, BOXES, AND THE LIKE WHERE THE BUILDING, EQUIPMENT, OR STRUCTURE IS NOT SUITABLE FOR MOUNTING SAME DIRECTLY THEREON.
2. ON WIRING PLANS, A NUMERAL BESIDE A BRANCH CIRCUIT OUTLET INDICATES THE PANELBOARD CIRCUIT CONNECTION. A LOWER CASE LETTER BESIDE A LIGHTING FIXTURE SHALL INDICATE THE SWITCH LEG CONNECTION. WHERE TWO LOWER CASE LETTERS ARE SHOWN BESIDE A THREE-LAMP LIGHTING FIXTURE, IT SHALL INDICATE IN ALPHABETICAL ORDER THE SWITCH LEG CONNECTION TO THE TWO-LAMP BALLAST AND TO THE SINGLE-LAMP BALLAST RESPECTIVELY.
3. UPPER CASE LETTER BESIDE LIGHTING FIXTURE INDICATES FIXTURE TYPE. SEE LIGHTING FIXTURE SCHEDULE.
4. SUBSCRIPTS BY DEVICE SYMBOLS IN LEGEND ARE AS FOLLOWS:

AC	-	6" ABOVE COUNTER/SURFACE
EWC	-	ELECTRIC WATER COOLER
FSD	-	FIRE/SMOKE DAMPER
GF	-	GROUND FAULT INTERRUPTER
HD	-	HAND DRYER BY ARCHITECTURAL DIVISION
IG	-	ISOLATED GROUND
IWH	-	INSTANT WATER HEATER
M	-	MANUAL STARTER
W	-	WALL MOUNTED. 54"AFF
WP	-	WEATHERPROOF
XP	-	EXPLOSION PROOF ENCLOSURE

5. ALL WIRING IS 2#12.1#12G.3/4"C. UNLESS NOTED OTHERWISE.
6. WHERE HOME RUNS TO A MULTIPLE POLE BREAKER ARE SHOWN. THE CIRCUIT IS IDENTIFIED ONLY BY THE NUMBER OF THE FIRST POLE.
7. THE TERM "PROVIDE" USED IN THE SPECIFICATIONS AND DRAWINGS SHALL MEAN "TO FURNISH, INSTALL, CONNECT, AND PLACE IN SERVICE COMPLETELY IN THE SPECIFIED OR APPROVED MANNER THE ITEM DESCRIBED."
8. ELECTRICAL EQUIPMENT ENCLOSURES SHALL BE NEMA 1 FOR INDOOR USE AND NEMA 3R FOR OUTDOOR USE.
9. ELECTRICAL WORK EMBEDDED IN CONCRETE OR OTHERWISE PERMANENTLY CONCEALED SHALL NOT BE COVERED UNTIL INSPECTED BY THE OWNER'S REPRESENTATIVE.
10. ALL PENETRATIONS THROUGH FIRE WALLS SHALL BE FIRESTOPPED IN ACCORDANCE WITH FIRESTOPPING SPECIFICATIONS.
11. SEE INTERIOR DRAWINGS FOR DEVICE LOCATIONS SUCH AS: LIGHT SWITCHES, FLOOR FEEDS, FLOOR BOXES, WALL FEEDS, LIGHT FIXTURES.
12. COORDINATE SECURITY ROUGH-IN AND INSTALLATION WITH OWNER'S SECURITY PROVIDER.

RECEIVED
MAY 08 2006
INTEGRA CONSTRUCTION, INC.

S&W

Stevens&Wilkinson
STEVENS & WILKINSON STANG & NEWDOW, INC.
ARCHITECTURE ENGINEERING INTERIORS
100 PEACHTREE STREET NW, SUITE 2500
ATLANTA, GA 30303
P 404.522.8888
F 404.521.6204
WWW.SW-SN.COM

idea|span
linking knowledge and design
A STEVENS & WILKINSON COMPANY
100 PEACHTREE STREET NW, SUITE 2400
ATLANTA, GA 30303
P 404.522.8899
F 404.521.6343
www.idea-span.com

COLORADO LICENSED
39982
PROFESSIONAL ENGINEER

■ SUBMITTALS

DATE	DESCRIPTION
04.24.06	INFORMAL RELEASE ON PRECAST
04.26.06	RELEASE ON PRECAST
05.08.06	PRICING / PERMIT SET

■ REVISIONS

DATE	DESCRIPTION

☒ APPROVED FOR CONSTRUCTION
☐ NOT APPROVED FOR CONSTRUCTION

THIS DRAWING IS THE PROPERTY OF STEVENS & WILKINSON STANG & NEWDOW, INC. UNAUTHORIZED USE OF ANY KIND, INCLUDING USE ON OTHER PROJECT IS PROHIBITED.

©STEVENS & WILKINSON STANG & NEWDOW, INC.

■ PROJECT NUMBER: 06041.00
■ DATE: 05.08.06
■ FILE: F:/PROJECTS/06041.00/DESIGN

cingular WIRELESS
PUEBLO, COLORADO

ELECTRICAL LEGEND AND NOTES

E0.1

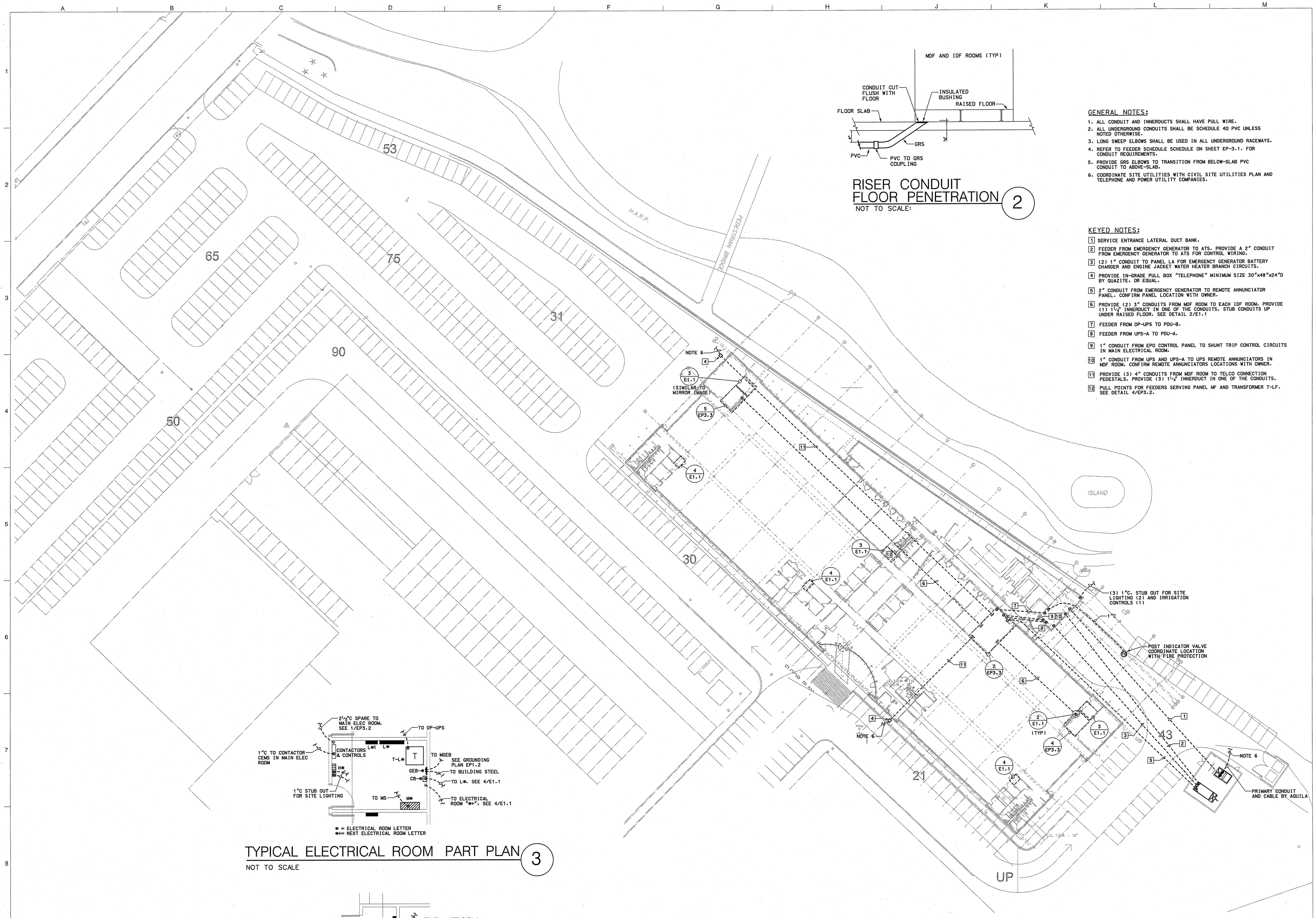

RISER CONDUIT FLOOR PENETRATION 2

NOT TO SCALE:

GENERAL NOTES:

1. ALL CONDUIT AND INNERDUCTS SHALL HAVE PULL WIRE.
2. ALL UNDERGROUND CONDUITS SHALL BE SCHEDULE 40 PVC UNLESS NOTED OTHERWISE.
3. LONG SWEEP ELBOWS SHALL BE USED IN ALL UNDERGROUND RACEWAYS.
4. REFER TO FEEDER SCHEDULE SCHEDULE ON SHEET EP-3.1. FOR CONDUIT REQUIREMENTS.
5. PROVIDE GRS ELBOWS TO TRANSITION FROM BELOW-SLAB PVC CONDUIT TO ABOVE-SLAB.
6. COORDINATE SITE UTILITIES WITH CIVIL SITE UTILITIES PLAN AND TELEPHONE AND POWER UTILITY COMPANIES.

KEYED NOTES:

1. SERVICE ENTRANCE LATERAL DUCT BANK.
2. FEEDER FROM EMERGENCY GENERATOR TO ATS. PROVIDE A 2" CONDUIT FROM EMERGENCY GENERATOR TO ATS FOR CONTROL WIRING.
3. (2) 1" CONDUIT TO PANEL LA FOR EMERGENCY GENERATOR BATTERY CHARGER AND ENGINE JACKET WATER HEATER BRANCH CIRCUITS.
4. PROVIDE IN-GRADE PULL BOX "TELEPHONE" MINIMUM SIZE 30"x48"x24"D BY QUAZITE, OR EQUAL.
5. 2" CONDUIT FROM EMERGENCY GENERATOR TO REMOTE ANNUNCIATOR PANEL. CONFIRM PANEL LOCATION WITH OWNER.
6. PROVIDE (2) 3" CONDUITS FROM MDF ROOM TO EACH IDF ROOM. PROVIDE (1) 1-1/2" INNERDUCT IN ONE OF THE CONDUITS. STUB CONDUITS UP UNDER RAISED FLOOR. SEE DETAIL 2/E1.1
7. FEEDER FROM DP-UPS TO PDU-B.
8. FEEDER FROM UPS-A TO PDU-A.
9. 1" CONDUIT FROM EPO CONTROL PANEL TO SHUNT TRIP CONTROL CIRCUITS IN MAIN ELECTRICAL ROOM.
10. 1" CONDUIT FROM UPS AND UPS-A TO UPS REMOTE ANNUNCIATORS IN MDF ROOM. CONFIRM REMOTE ANNUNCIATORS LOCATIONS WITH OWNER.
11. PROVIDE (3) 4" CONDUITS FROM MDF ROOM TO TELCO CONNECTION PEDESTALS. PROVIDE (3) 1"4" INNERDUCT IN ONE OF THE CONDUITS.
12. PULL POINTS FOR FEEDERS SERVING PANEL MF AND TRANSFORMER T-LF. SEE DETAIL 4/EP3.2.

TYPICAL ELECTRICAL ROOM PART PLAN 3

NOT TO SCALE

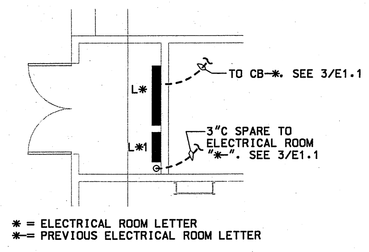

TYPICAL ELECTRICAL ROOM PART PLAN 4

NOT TO SCALE

ELECTRICAL UNDERGROUND SITE PLAN 1

SCALE: 1"=30'-0"

5' 20' 40' 100'

SCALE: 1"=30'-0"

RECEIVED
MAY 08 2006
INTEGRA CONSTRUCTION, INC.

S&W
Stevens&Wilkinson
STEVENS & WILKINSON STANG & NEWDOW, INC.
ARCHITECTURE ENGINEERING INTERIORS
100 PEACHTREE STREET NW, SUITE 2500
ATLANTA, GA 30303
P 404.522.8888
F 404.521.6204
WWW.SW-SN.COM

idea|span
linking knowledge and design
A STEVENS & WILKINSON COMPANY
100 PEACHTREE STREET NW, SUITE 2400
ATLANTA, GA 30303
P 404.522.8899
F 404.521.6343
www.idea-span.com

COLORADO LICENSED
CHRISTOPHER GERARD KOLODZIEJ
39982
PROFESSIONAL ENGINEER

■ SUBMITTALS

DATE	DESCRIPTION
04.24.06	INFORMAL RELEASE ON PRECAST
04.28.06	RELEASE ON PRECAST
05.08.06	PRICING / PERMIT SET

■ REVISIONS

DATE	DESCRIPTION

☒ APPROVED FOR CONSTRUCTION
☐ NOT APPROVED FOR CONSTRUCTION

THIS DRAWING IS THE PROPERTY OF STEVENS & WILKINSON STANG & NEWDOW, INC. UNAUTHORIZED USE OF ANY KIND, INCLUDING USE ON OTHER PROJECT IS PROHIBITED.
©STEVENS & WILKINSON STANG & NEWDOW, INC.

■ PROJECT NUMBER: 06041.00
■ DATE: 05.08.06
■ FILE: F:/PROJECTS/06041.00/DESIGN

cingular WIRELESS
PUEBLO, COLORADO

ELECTRICAL UNDERGROUND SITE PLAN

E1.1

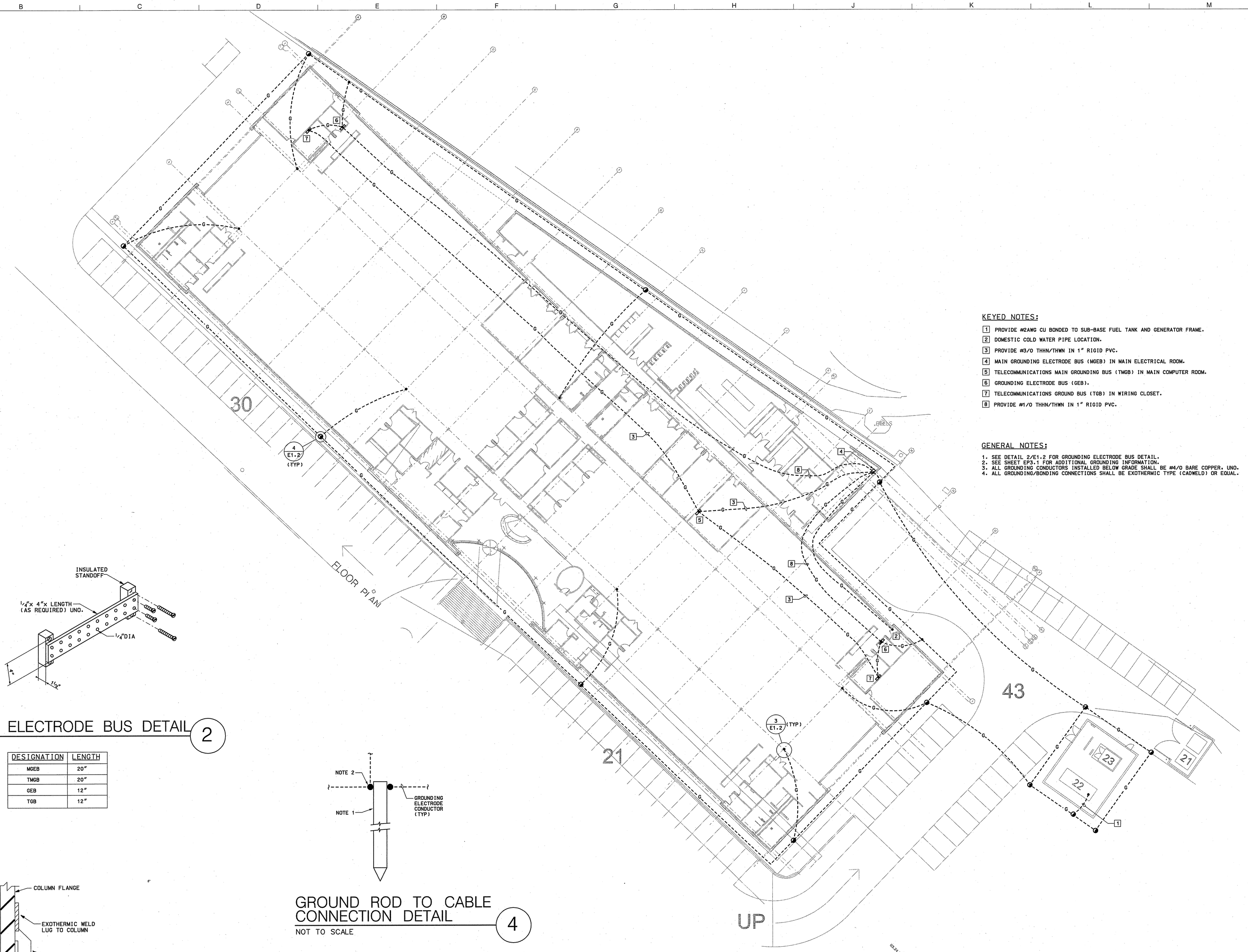

KEYED NOTES:

1. PROVIDE #2AWG CU BONDED TO SUB-BASE FUEL TANK AND GENERATOR FRAME.
2. DOMESTIC COLD WATER PIPE LOCATION.
3. PROVIDE #3/0 THHN/THWN IN 1" RIGID PVC.
4. MAIN GROUNDING ELECTRODE BUS (MGEB) IN MAIN ELECTRICAL ROOM.
5. TELECOMMUNICATIONS MAIN GROUNDING BUS (TMGB) IN MAIN COMPUTER ROOM.
6. GROUNDING ELECTRODE BUS (GEB).
7. TELECOMMUNICATIONS GROUND BUS (TGB) IN WIRING CLOSET.
8. PROVIDE #1/0 THHN/THWN IN 1" RIGID PVC.

GENERAL NOTES:

1. SEE DETAIL 2/E1.2 FOR GROUNDING ELECTRODE BUS DETAIL.
2. SEE SHEET EP3.1 FOR ADDITIONAL GROUNDING INFORMATION.
3. ALL GROUNDING CONDUCTORS INSTALLED BELOW GRADE SHALL BE #4/0 BARE COPPER. UNO.
4. ALL GROUNDING/BONDING CONNECTIONS SHALL BE EXOTHERMIC TYPE (CADWELD) OR EQUAL.

GROUNDING ELECTRODE BUS DETAIL 2

NOT TO SCALE

DESIGNATION	LENGTH
MGEB	20"
TMGB	20"
GEB	12"
TGB	12"

GROUND ROD TO CABLE CONNECTION DETAIL 4

NOT TO SCALE

NOTES 4/E1.2:

1. PROVIDE GROUND RODS PER SPECIFICATION 16450.
2. PROVIDE EXOTHERMIC WELD TO CABLE WITH CADWELD TYPE "NC" OR EQUAL.

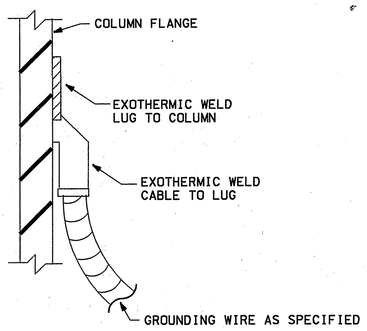

STEEL COLUMN GROUNDING DETAIL 3

NOT TO SCALE

ELECTRICAL GROUNDING PLAN 1

SCALE: 1"=20'-0"

5' 20' 40' 100'

SCALE: 1"=20'-0"

RECEIVED
MAY 08 2006
INTEGRA CONSTRUCTION, INC.

Stevens&Wilkinson
STEVENS & WILKINSON STANG & NEWDOW, INC.
ARCHITECTURE ENGINEERING INTERIORS

100 PEACHTREE STREET NW, SUITE 2500
ATLANTA, GA 30303
P 404.522.8888
F 404.521.6204
WWW.SW-SN.COM

idea|span
linking knowledge and design
A STEVENS & WILKINSON COMPANY

100 PEACHTREE STREET NW, SUITE 2400
ATLANTA, GA 30303
P 404.522.8899
F 404.521.6343
www.idea-span.com

COLORADO LICENSED PROFESSIONAL ENGINEER 39982

■ SUBMITTALS

DATE	DESCRIPTION
04.24.06	INFORMAL RELEASE ON PRECAST
04.26.06	RELEASE ON PRECAST
05.08.06	PRICING / PERMIT SET

■ REVISIONS

DATE	DESCRIPTION

☒ APPROVED FOR CONSTRUCTION
☐ NOT APPROVED FOR CONSTRUCTION

THIS DRAWING IS THE PROPERTY OF STEVENS & WILKINSON STANG & NEWDOW, INC. UNAUTHORIZED USE OF ANY KIND, INCLUDING USE ON OTHER PROJECT IS PROHIBITED.

© STEVENS & WILKINSON STANG & NEWDOW, INC.

■ PROJECT NUMBER: 06041.00
■ DATE: 05.08.06
■ FILE: F:/PROJECTS/06041.00/DESIGN

cingular WIRELESS
PUEBLO, COLORADO

ELECTRICAL GROUNDING PLAN

E1.2

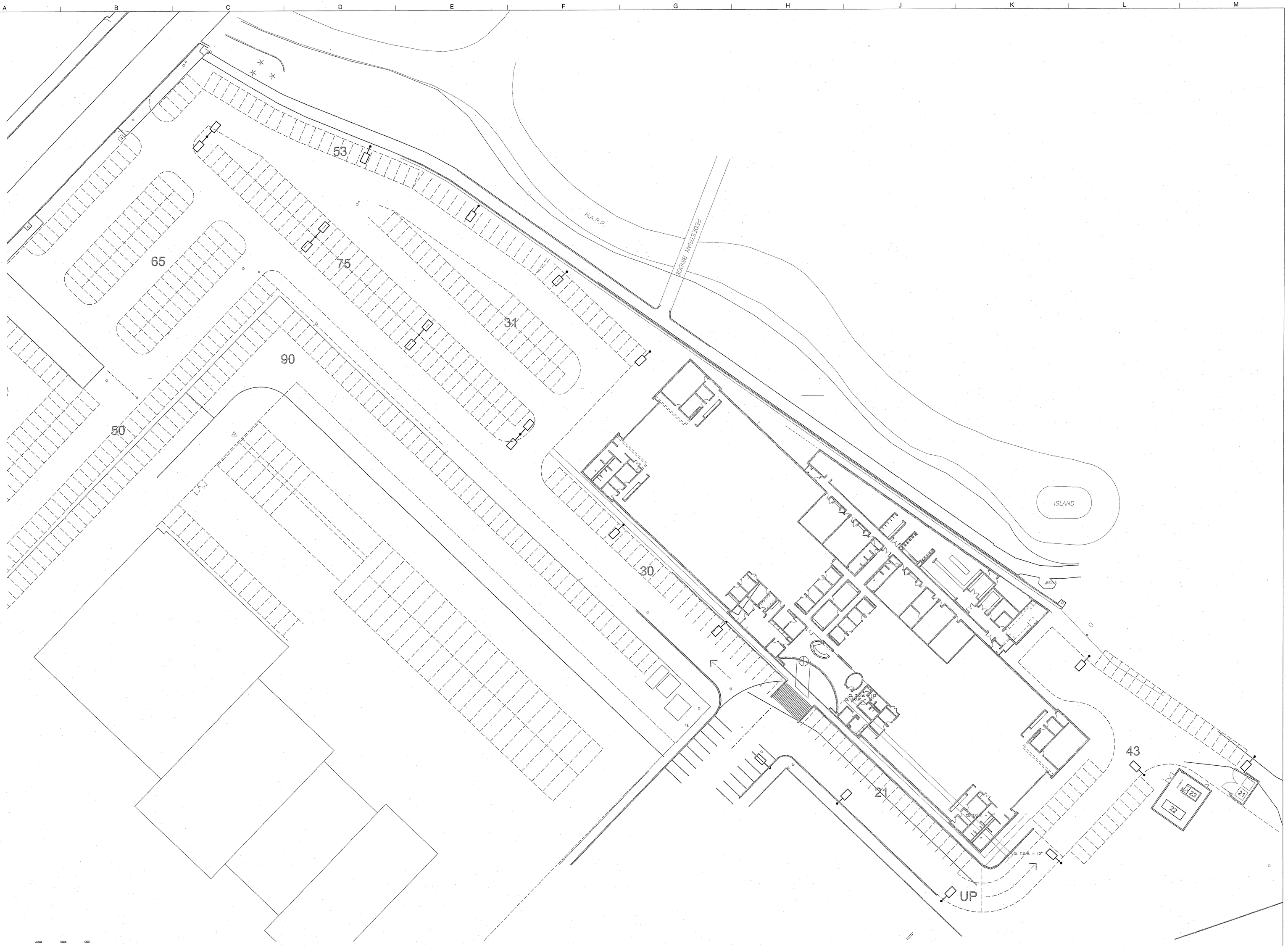

ELECTRICAL SITE LIGHTING PLAN 1

SCALE: 1"=30'-0"

5' 20' 40' 100'

SCALE: 1"=30'-0"

RECEIVED
MAY 0 8 2006
INTEGRA CONSTRUCTION, INC.

S&W

Stevens&Wilkinson
STEVENS & WILKINSON STANG & NEWDOW, INC.
ARCHITECTURE ENGINEERING INTERIORS

100 PEACHTREE STREET NW, SUITE 2500
ATLANTA, GA 30303
P 404.522.8888
F 404.521.6204
WWW.SW-SN.COM

idea|span
linking knowledge and design

A STEVENS & WILKINSON COMPANY

100 PEACHTREE STREET NW, SUITE 2400
ATLANTA, GA 30303
P 404.522.8899
F 404.521.6343
www.idea-span.com

COLORADO LICENSED LANDSCAPE ARCHITECT 39982 PROFESSIONAL ENGINEER

■ SUBMITTALS

DATE	DESCRIPTION
04.24.06	INFORMAL RELEASE ON PRECAST
04.26.06	RELEASE ON PRECAST
05.08.06	PRICING / PERMIT SET

■ REVISIONS

DATE	DESCRIPTION

☒ APPROVED FOR CONSTRUCTION
☐ NOT APPROVED FOR CONSTRUCTION

THIS DRAWING IS THE PROPERTY OF STEVENS & WILKINSON STANG & NEWDOW, INC. UNAUTHORIZED USE OF ANY KIND, INCLUDING USE ON OTHER PROJECT IS PROHIBITED.

© STEVENS & WILKINSON STANG & NEWDOW, INC.

■ PROJECT NUMBER: 06041.00
■ DATE: 05.08.06
■ FILE: F:/PROJECTS/06041.00/DESIGN

cingular WIRELESS

PUEBLO, COLORADO

ELECTRICAL SITE LIGHTING PLAN

E1.3



Luminaire Schedule							
Project: All Projects							
Symbol	Qty	Label	Arrangement	Lumens	LLF	Description	Total Watts
	4	A	D180	36000	0.720	GFM 5 400 MHR F	916
	13	B	SINGLE	36000	0.720	GFM 3 400 MHR F	458

Numeric Summary					
Project: All Projects					
Label	Avg	Max	Min	Avg/Min	Max/Min
AREA	1.84	3.9	0.6	3.07	6.50

All 28' Poles to be mounted on concrete pedestals 2' above grade, for a total mounting height of 30' .

Maintained Footcandle levels at grade, using a .72 Total Light Loss Factor.

SITE LIGHTING PHOTOMETRICS 1

SCALE: 1"=30'-0"

5' 20' 40' 100'

SCALE: 1"=30'-0"

RECEIVED
MAY 08 2006
INTEGRA CONSTRUCTION, INC.

S&W

Stevens&Wilkinson
STEVENS & WILKINSON STANG & NEWDOW, INC.
ARCHITECTURE ENGINEERING INTERIORS

100 PEACHTREE STREET NW, SUITE 2500
ATLANTA, GA 30303
P 404.522.8888
F 404.521.6204
WWW.SW-SN.COM

idea|span
linking knowledge and design

A STEVENS & WILKINSON COMPANY

100 PEACHTREE STREET NW, SUITE 2400
ATLANTA, GA 30303
P 404.522.8899
F 404.521.6343
www.idea-span.com

39982

■ SUBMITTALS

DATE	DESCRIPTION
04.24.06	INFORMAL RELEASE ON PRECAST
04.26.06	RELEASE ON PRECAST
05.08.06	PRICING / PERMIT SET

■ REVISIONS

DATE	DESCRIPTION

☒ APPROVED FOR CONSTRUCTION
☐ NOT APPROVED FOR CONSTRUCTION

THIS DRAWING IS THE PROPERTY OF STEVENS & WILKINSON STANG & NEWDOW, INC. UNAUTHORIZED USE OF ANY KIND, INCLUDING USE ON OTHER PROJECT IS PROHIBITED.

© STEVENS & WILKINSON STANG & NEWDOW, INC.

■ PROJECT NUMBER: 06041.00
■ DATE: 05.08.06
■ FILE: F:/PROJECTS/06041.00/DESIGN

cingular WIRELESS

PUEBLO, COLORADO

SITE LIGHTING PHOTOMETRICS

E1.3A

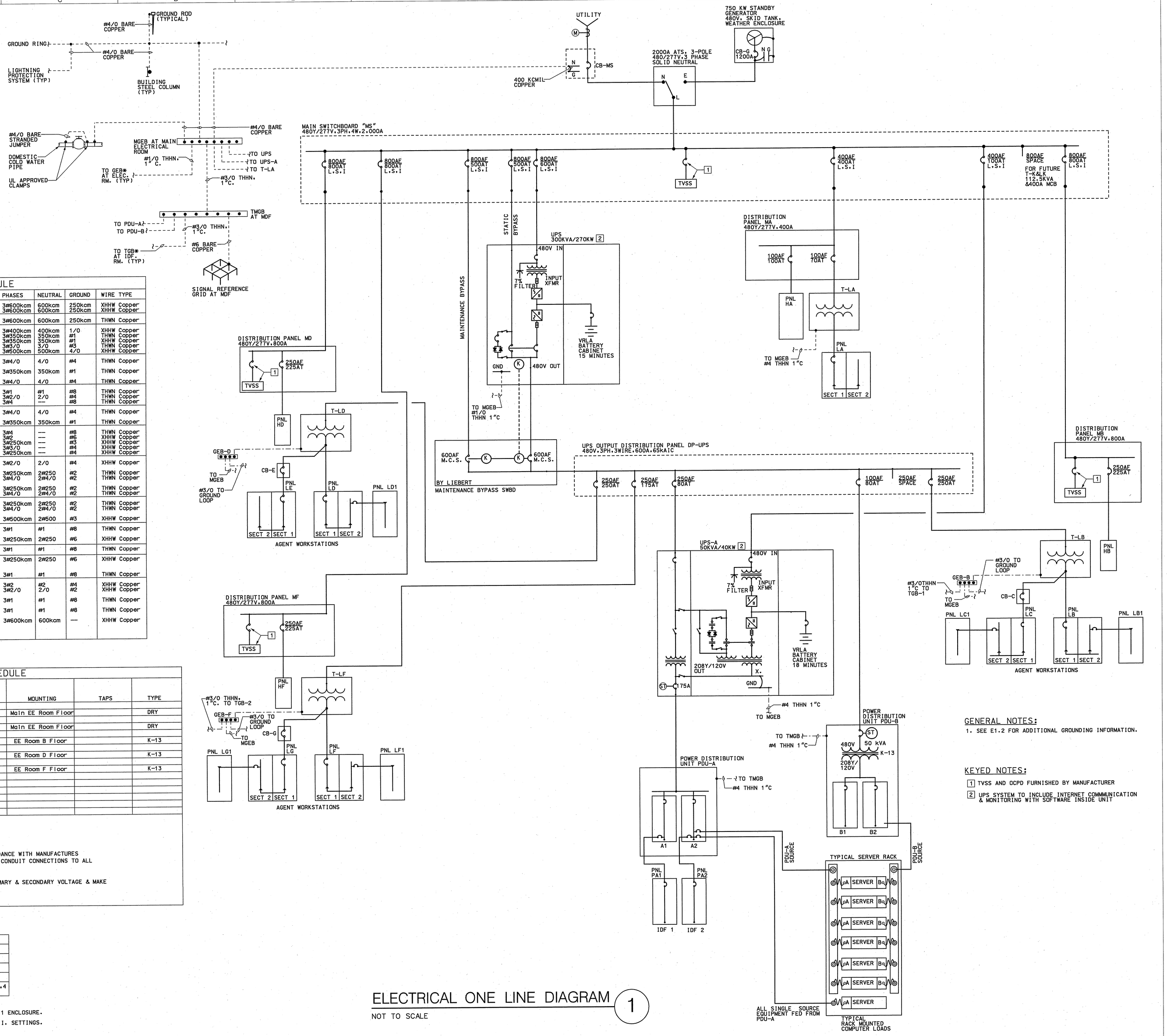

FEEDER SCHEDULE

FEEDER SCHEDULE					CONDUITS	PHASES	NEUTRAL	GROUND	WIRE TYPE
1st feeder 2nd feeder	from ATS from ATS	to CB-MS to CB-GEN			(5) 3-1/2" (5) 3-1/2"	3#600kcm 3#600kcm	600kcm 600kcm	250kcm 250kcm	XHHW Copper XHHW Copper
Feeder	from MS	to ATS			(5) 3-1/2"	3#600kcm	600kcm	250kcm	THWN Copper
Feeder Feeder Feeder Feeder Feeder	from MD from UPS from MB from MA from MF	to MS to MS to MS to MS to MS			(3) 3-1/2" (2) 3-1/2" (3) 3-1/2" (2) 2" (3) 3-1/2"	3#400kcm 3#350kcm 3#350kcm 3#3/0 3#500kcm	400kcm 350kcm 350kcm #3 500kcm	1/0 #1 #1 #3 4/0	XHHW Copper THWN Copper XHHW Copper THWN Copper XHHW Copper
Feeder	from HD	to MD			(1) 2-1/2"	3#4/0	4/0	#4	THWN Copper
Feeder	from MBP	to UPS			(2) 3"	3#350kcm	350kcm	#1	THWN Copper
Feeder	from HB	to MB			(1) 2-1/2"	3#4/0	4/0	#4	THWN Copper
Feeder Secondary Primary	from HA from LA from 45KVA	to MA to 45KVA to MA			(1) 1-1/2" (1) 2" (1) 1"	3#1 3#2/0 3#4	#1 2/0 —	#8 #4 #8	THWN Copper THWN Copper THWN Copper
Feeder	from HF	to MF			(1) 2-1/2"	3#4/0	4/0	#4	THWN Copper
Feeder	from DP-UPS	to MBP			(2) 3"	3#350kcm	350kcm	#1	THWN Copper
Primary Primary Primary Primary Primary Primary	from UPS-A from PDU-B from T-LF from T-LB from T-LD from T-LD	to DP-UPS to DP-UPS to DP-UPS to DP-UPS to DP-UPS to DP-UPS			(1) 1" (1) 1-1/2" (1) 2-1/2" (1) 2-1/2" (1) 2-1/2" (1) 2-1/2"	3#4 3#2 3#250kcm 3#3/0 3#250kcm	— — — — —	#8 #6 #3 #4 #4	XHHW Copper XHHW Copper XHHW Copper XHHW Copper XHHW Copper
Secondary	from PDU-A	to UPS-A			(1) 2"	3#2/0	2/0	#4	XHHW Copper
Secondary Secondary	from CB-G from LF	to T-LF to T-LF			(1) 3" (1) 2-1/2"	3#250kcm 3#4/0	2#250 2#4/0	#2 #2	THWN Copper THWN Copper
Secondary Secondary	from CB-C from LB	to T-LB to T-LB			(1) 3" (1) 2-1/2"	3#250kcm 3#4/0	2#250 2#4/0	#2 #2	THWN Copper THWN Copper
Secondary Secondary	from CB-E from LD	to T-LD to T-LD			(1) 3" (1) 2-1/2"	3#250kcm 3#4/0	2#250 2#4/0	#2 #2	THWN Copper THWN Copper
Feeder	from LG	to CB-G			(1) 3-1/2"	3#500kcm	2#500	#3	XHHW Copper
Feeder	from LF1	to LF			(1) 1-1/2"	3#1	#1	#8	THWN Copper
Feeder	from LC	to CB-C			(1) 3"	3#250kcm	2#250	#6	XHHW Copper
Feeder	from LB1	to LB			(1) 1-1/2"	3#1	#1	#8	THWN Copper
Feeder	from LE	to CB-E			(1) 3"	3#250kcm	2#250	#6	XHHW Copper
Feeder	from LD1	to LD			(1) 1-1/2"	3#1	#1	#8	THWN Copper
Feeder Feeder	from PA1 from PA2	to A2 to A2			(1) 1-1/2" (1) 2-1/2"	3#2 3#2/0	#2 2/0	#4 #2	XHHW Copper XHHW Copper
Feeder	from LG1	to LG			(1) 1-1/2"	3#1	#1	#8	THWN Copper
Feeder	from LC1	to LC			(1) 1-1/2"	3#1	#1	#8	THWN Copper
Feeder	from CB-MS	to UTILITY			(5) 4"	3#600kcm	600kcm	—	XHHW Copper

TRANSFORMER SCHEDULE

NAME	KVA	PRIMARY VOLTAGE	TRANSFORMER SCHEDULE SECONDARY VOLTAGE	MOUNTING	TAPS	TYPE
FUTURE T-K	112.5	480 Delta	208Y/120	Main EE Room Floor		DRY
T-LA	45	480 Delta	208Y/120	Main EE Room Floor		DRY
T-LB	150	480 Delta	208Y/120	EE Room B Floor		K-13
T-LD	150	480 Delta	208Y/120	EE Room D Floor		K-13
T-LF	112.5	480 Delta	208Y/120	EE Room F Floor		K-13

SEE FEEDER SCHEDULE FOR SIZES.

NOTES:

1. ALL TRANSFORMERS SHALL BE MOUNTED AND CONNECTED IN ACCORDANCE WITH MANUFACTURES RECOMMENDATIONS FOR "QUIET" OPERATION. PROVIDE FLEXIBLE CONDUIT CONNECTIONS TO ALL TRANSFORMERS.
2. TAP SETTINGS ARE SUGGESTED. CONTRACTOR SHALL MEASURE PRIMARY & SECONDARY VOLTAGE & MAKE THE PROPER TAP ADJUSTMENTS.

ENCLOSED CIRCUIT BREAKER SCHEDULE

ID	FRAME	TRIP	POLES	VOLTS	AIC	NOTES
CB-C	400	250	3	208Y/120V	10K	1
CB-E	400	250	3	208Y/120V	10K	1
CB-G	225	200	3	208Y/120V	10K	1
CB-MS	2,000	2,000	3	480Y/277V	65K	1,2,3,4

NOTES:

1. PROVIDE GROUND BAR KIT, SOLID NEUTRAL KIT AND NEMA 1 ENCLOSURE.
2. PROVIDE GROUND FAULT EQUIPMENT PROTECTION WITH L.S.I. SETTINGS.
3. PROVIDE UL "SERVICE ENTRANCE" LABEL.
4. PROVIDE 100% RATED MAIN DEVICE.

ELECTRICAL ONE LINE DIAGRAM 1

NOT TO SCALE

GENERAL NOTES:

1. SEE E1.2 FOR ADDITIONAL GROUNDING INFORMATION.

KEYED NOTES:

1. TVSS AND OCPD FURNISHED BY MANUFACTURER
2. UPS SYSTEM TO INCLUDE INTERNET COMMUNICATION & MONITORING WITH SOFTWARE INSIDE UNIT

RECEIVED
MAY 08 2006
INTEGRA CONSTRUCTION, INC.

S&W
Stevens&Wilkinson
STEVENS & WILKINSON STANG & NEWDOW, INC.
ARCHITECTURE ENGINEERING INTERIORS
100 PEACHTREE STREET NW, SUITE 2500
ATLANTA, GA 30303
P 404.522.8888
F 404.521.6204
WWW.SW-SN.COM

idea|span
linking knowledge and design
A STEVENS & WILKINSON COMPANY
100 PEACHTREE STREET NW, SUITE 2400
ATLANTA, GA 30303
P 404.522.8899
F 404.521.6343
www.idea-span.com

39982

■ SUBMITTALS

DATE	DESCRIPTION
04.24.06	INFORMAL RELEASE ON PRECAST
04.28.06	RELEASE ON PRECAST
05.08.06	PRICING / PERMIT SET

■ REVISIONS

DATE	DESCRIPTION

X APPROVED FOR CONSTRUCTION
□ NOT APPROVED FOR CONSTRUCTION

THIS DRAWING IS THE PROPERTY OF STEVENS & WILKINSON STANG & NEWDOW, INC. UNAUTHORIZED USE OF ANY KIND, INCLUDING USE ON OTHER PROJECT IS PROHIBITED.
©STEVENS & WILKINSON STANG & NEWDOW, INC.

■ PROJECT NUMBER: 06041.00
■ DATE: 05.08.06
■ FILE: F:/PROJECTS/06041.00/DESIGN

cingular WIRELESS
PUEBLO, COLORADO

ELECTRICAL ONE LINE DIAGRAM

EP3.1

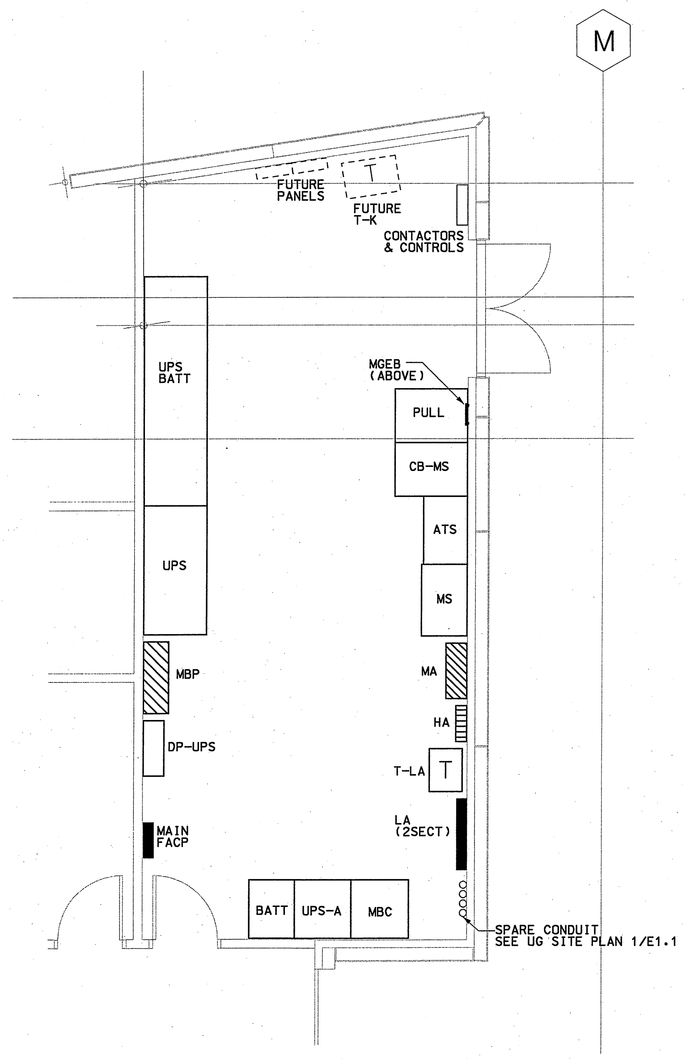

ELECTRICAL ROOM A PART PLAN 1

SCALE: 1/4" = 1'-0"

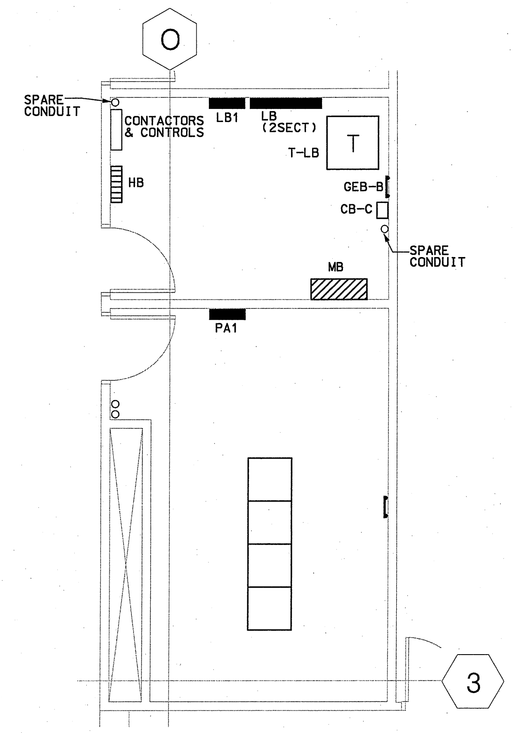

ELECTRICAL ROOM B PART PLAN 2

SCALE: 1/4" = 1'-0"

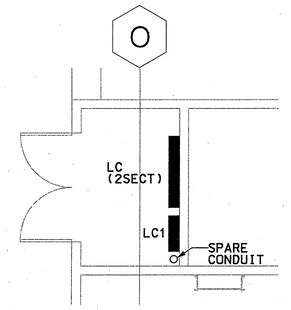

ELECTRICAL ROOM C PART PLAN 3

SCALE: 1/4" = 1'-0"

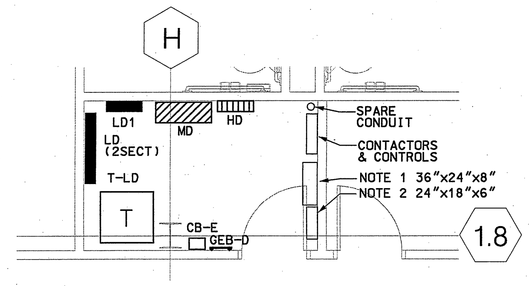

ELECTRICAL ROOM D PART PLAN 4

SCALE: 1/4" = 1'-0"

NOTE 1. PULL BOX FOR FEEDER FROM MF TO MS AND LIGHTING CONTACTOR CONDUIT.
NOTE 2. PULL BOX FOR FEEDER FROM T-LF TO DP-UPS AND SPARE CONDUIT FROM ELECTRICAL ROOM F TO MAIN ELECTRICAL ROOM.

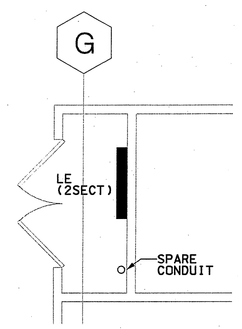

ELECTRICAL ROOM E PART PLAN 5

SCALE: 1/4" = 1'-0"

GENERAL NOTES:

1. REFER TO SHEET E1.1 ELECTRICAL UNDERGROUND SITE PLAN.
2. REFER TO SHEET E1.2 FOR ELECTRICAL GROUNDING PLAN.
3. REFER TO SHEET EP3.1 FOR ELECTRICAL ONE LINE DIAGRAM AND FEEDER SCHEDULE

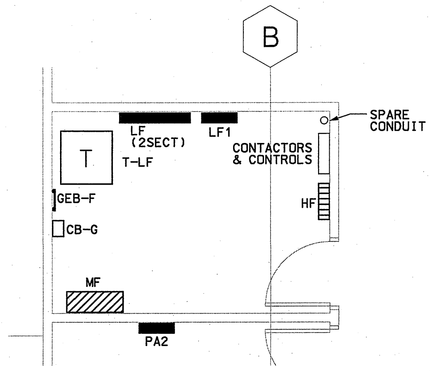

ELECTRICAL ROOM F PART PLAN 6

SCALE: 1/4" = 1'-0"

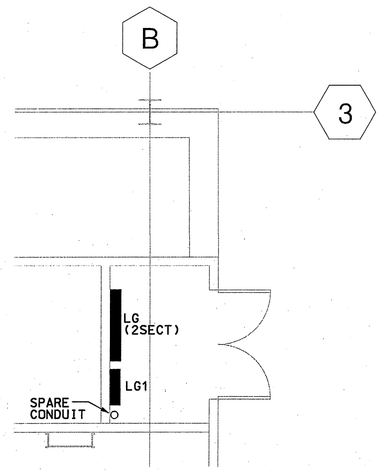

ELECTRICAL ROOM G PART PLAN 7

SCALE: 1/4" = 1'-0"

RECEIVED
MAY 08 2006
INTEGRA CONSTRUCTION, INC.

S&W
Stevens&Wilkinson
STEVENS & WILKINSON STANG & NEWDOW, INC.
ARCHITECTURE ENGINEERING INTERIORS
100 PEACHTREE STREET NW, SUITE 2500
ATLANTA, GA 30303
P 404.522.8888
F 404.521.6204
WWW.SW-SN.COM

idea|span
linking knowledge and design
A STEVENS & WILKINSON COMPANY
100 PEACHTREE STREET NW, SUITE 2400
ATLANTA, GA 30303
P 404.522.8899
F 404.521.6343
www.idea-span.com

39982

■ SUBMITTALS

DATE	DESCRIPTION
04.24.06	INFORMAL RELEASE ON PRECAST
04.26.06	RELEASE ON PRECAST
05.08.06	PRICING / PERMIT SET

■ REVISIONS

DATE	DESCRIPTION

X APPROVED FOR CONSTRUCTION
☐ NOT APPROVED FOR CONSTRUCTION

THIS DRAWING IS THE PROPERTY OF STEVENS & WILKINSON STANG & NEWDOW, INC. UNAUTHORIZED USE OF ANY KIND, INCLUDING USE ON OTHER PROJECT IS PROHIBITED.
© STEVENS & WILKINSON STANG & NEWDOW, INC.

■ PROJECT NUMBER: 06041.00
■ DATE: 05.08.06
■ FILE: F:/PROJECTS/06041.00/DESIGN

cingular WIRELESS
PUEBLO, COLORADO

ELECTRICAL PART PLANS

EP3.2

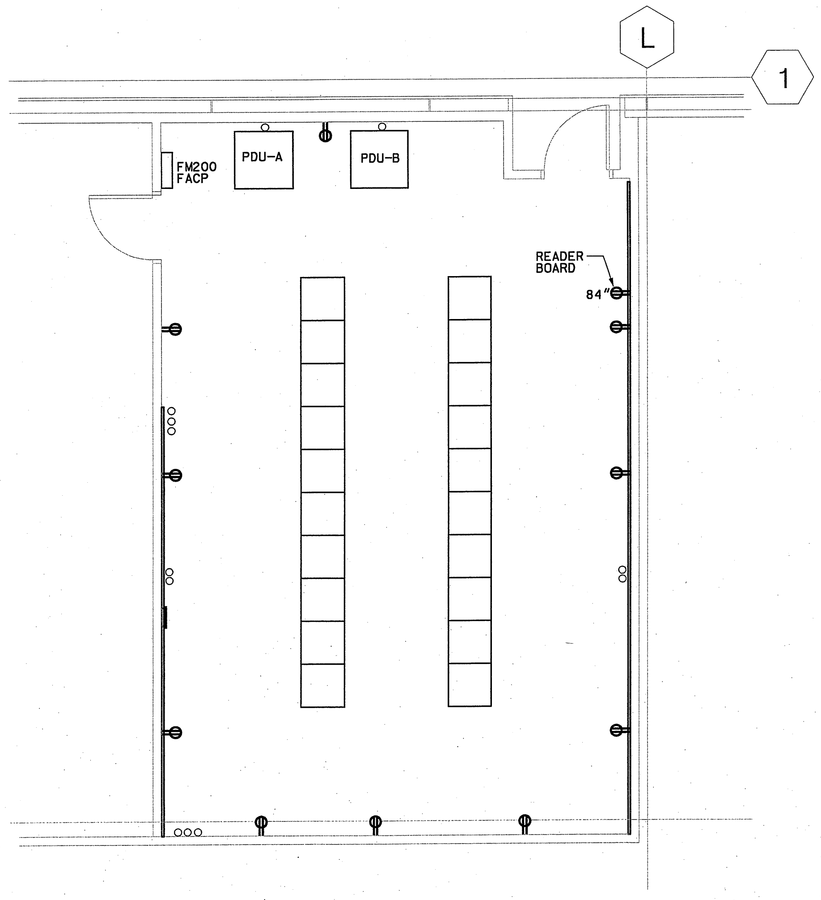

MDF ROOM POWER PART PLAN 1

SCALE: 1/4" = 1'-0"

NOTES:

1. MOUNT RECEPTACLES AT 18" ABOVE RAISED FLOOR (UNO) FLUSH WITH WALL OR PLYWOOD.
2. ALL POWER CONDUITS BELOW RAISED FLOOR SHALL BE ROUTED BETWEEN THE ROWS OF RACKS. LOW VOLTAGE WIRING SHALL BE ROUTED BETWEEN THE RACKS AND THE EAST AND WEST WALLS.

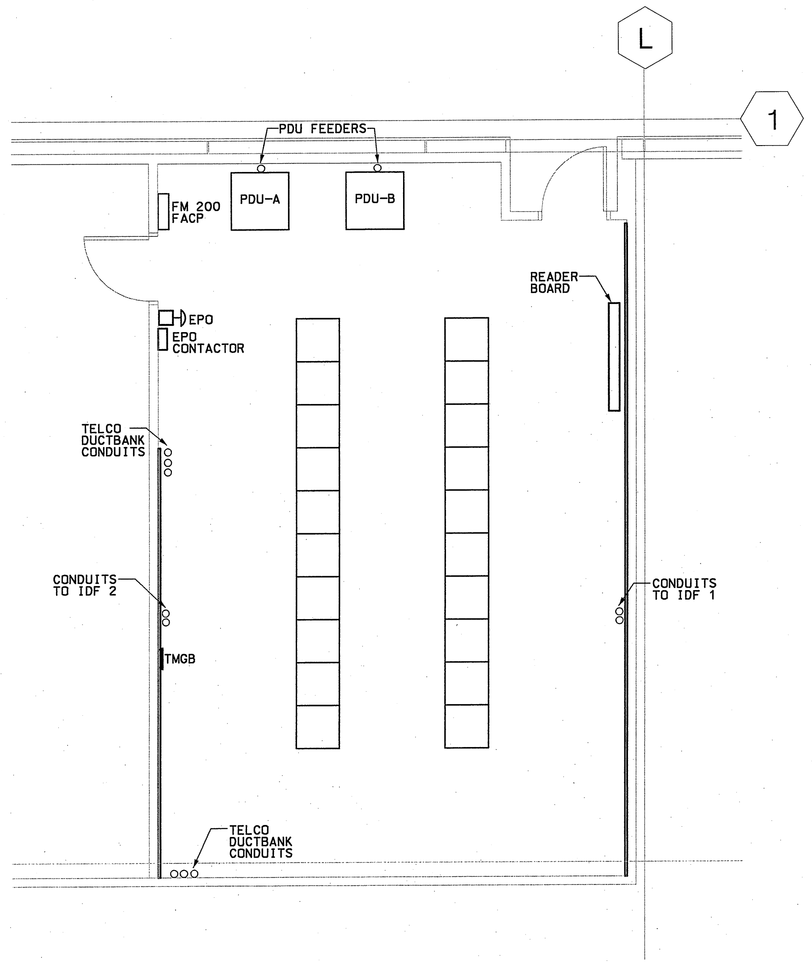

MDF ROOM EQUIPMENT PART PLAN 2

SCALE: 1/4" = 1'-0"

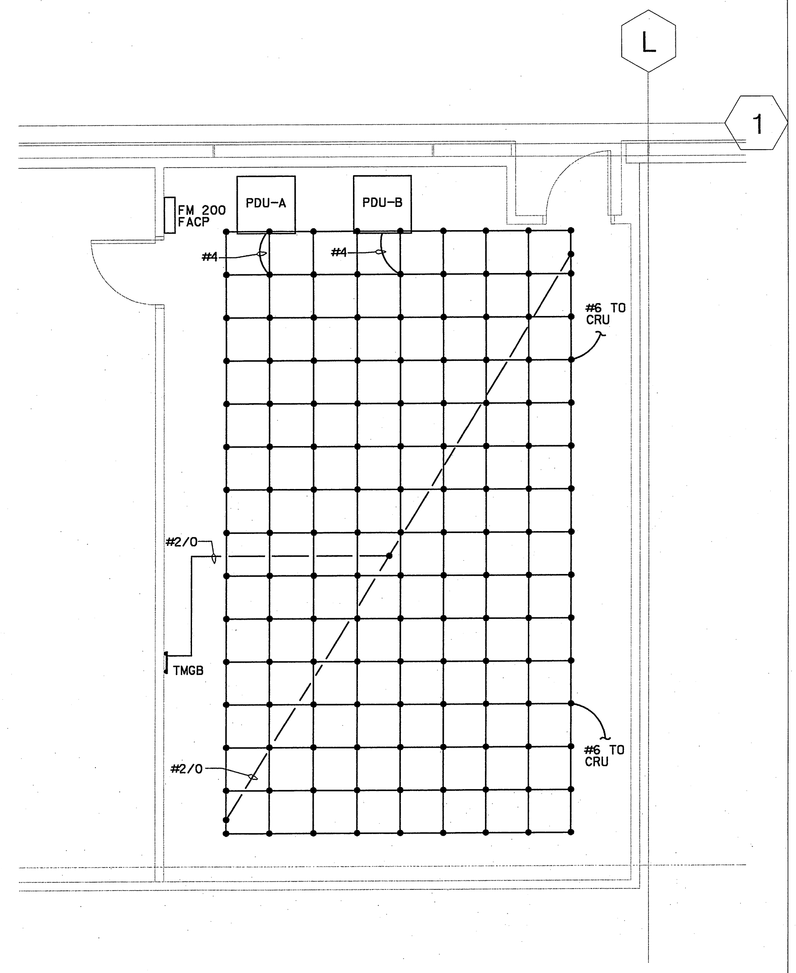

MDF ROOM GROUNDING PART PLAN 3

SCALE: 1/4" = 1'-0"

NOTES:

1. PROVIDE SIGNAL REFERENCE GROUNDING GRID FOR RAISED FLOOR IN ACCORDANCE WITH SECTION 16450.

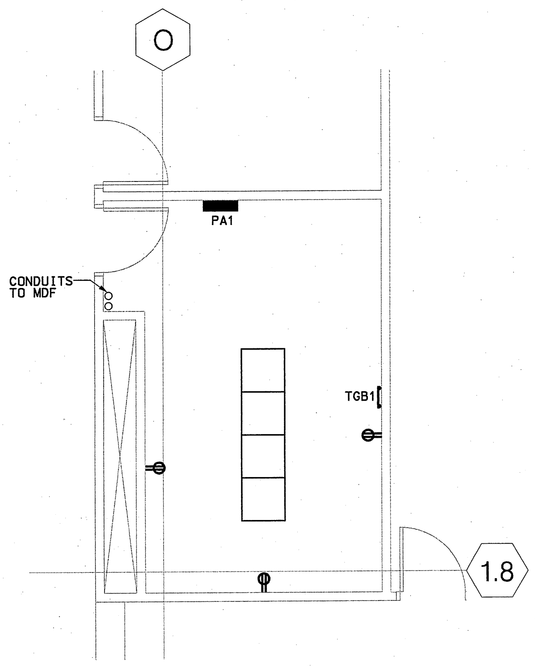

IDF ROOM 1 PART PLAN 4

SCALE: 1/4" = 1'-0"

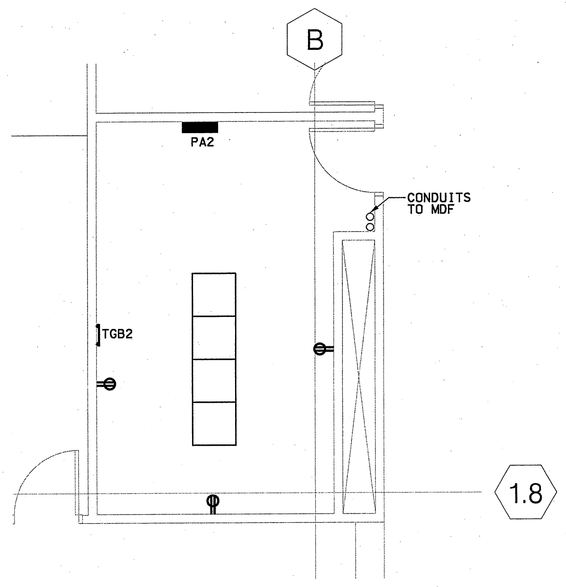

IDF ROOM 2 PART PLAN 5

SCALE: 1/4" = 1'-0"

GENERAL NOTES:

1. REFER TO SHEET E1.1 ELECTRICAL UNDERGROUND SITE PLAN.
2. REFER TO SHEET E1.2 FOR ELECTRICAL GROUNDING PLAN.
3. REFER TO SHEET EP3.1 FOR ELECTRICAL ONE LINE DIAGRAM AND FEEDER SCHEDULE

RECEIVED
MAY 08 2006
INTEGRA CONSTRUCTION, INC.

S&W

Stevens&Wilkinson
STEVENS & WILKINSON STANG & NEWDOW, INC.
ARCHITECTURE ENGINEERING INTERIORS

100 PEACHTREE STREET NW, SUITE 2500
ATLANTA, GA 30303
P 404.522.8888
F 404.521.6204
WWW.SW-SN.COM

idea|span
linking knowledge and design

A STEVENS & WILKINSON COMPANY

100 PEACHTREE STREET NW, SUITE 2400
ATLANTA, GA 30303
P 404.522.8899
F 404.521.6343
www.idea-span.com

COLORADO LICENSED
MARK R. LEONARD
39982
PROFESSIONAL ENGINEER

■ SUBMITTALS

DATE	DESCRIPTION
04.24.06	INFORMAL RELEASE ON PRECAST
04.26.06	RELEASE ON PRECAST
05.08.06	PRICING / PERMIT SET

■ REVISIONS

DATE	DESCRIPTION

☒ APPROVED FOR CONSTRUCTION
☐ NOT APPROVED FOR CONSTRUCTION

THIS DRAWING IS THE PROPERTY OF STEVENS & WILKINSON STANG & NEWDOW, INC. UNAUTHORIZED USE OF ANY KIND, INCLUDING USE ON OTHER PROJECT IS PROHIBITED.

© STEVENS & WILKINSON STANG & NEWDOW, INC.

■ PROJECT NUMBER: 06041.00
■ DATE: 05.08.06
■ FILE: F:/PROJECTS/06041.00/DESIGN

cingular WIRELESS

PUEBLO, COLORADO

ELECTRICAL PART PLANS

EP3.3